Official Journal
of the European Communities

Volume 19 No L 368
31 December 1976

English Edition

Legislation

Contents

I *Acts whose publication is obligatory*

* **Council Regulation (EEC) No 3237/76 of 21 December 1976 on the advance implementation of the Technical Annexes and the advance use of the specimen TIR carnet of the Customs Convention on the international transport of goods under cover of TIR carnets (TIR Convention) of 14 November 1975, Geneva** 1

Annex 1: Specimen of TIR carnet 2

Annex 2: Regulations on technical conditions applicable to road vehicles which may be accepted for international transport under customs seal 15

Annex 3: Procedure for the approval of road vehicles complying with the technical conditions set forth in the Regulations contained in Annex 2 23

Annex 4: Model certificate of approval of a road vehicle 25

Annex 5: TIR plates 27

Annex 6: Explanatory Notes 27

Annex 7: Annex regarding approval of containers 36

This copy completes the 1976 'L' series.

Acts whose titles are printed in light type are those relating to day-to-day management of agricultural matters, and are generally valid for a limited period.

The titles of all other Acts are printed in bold type and preceded by an asterisk.

I

(Acts whose publication is obligatory)

COUNCIL REGULATION (EEC) No 3237/76

of 21 December 1976

on the advance implementation of the Technical Annexes and the advance use of the specimen TIR carnet of the Customs Convention on the international transport of goods under cover of TIR carnets (TIR Convention) of 14 November 1975, Geneva

THE COUNCIL OF THE EUROPEAN COMMUNITIES,

Having regard to the Treaty establishing the European Economic Community,

Having regard to the recommendation from the Commission,

Whereas the simplification measures provided for under the TIR Convention revised at Geneva in 1975 should apply as soon as possible; whereas this is particularly so in respect of the technical provisions and the specimen TIR carnet of the aforesaid Convention,

HAS ADOPTED THIS REGULATION:

Article 1

1. As from 1 January 1977, Annexes 1, 2, 3, 4, 5 and 7 to the 1975 TIR Convention shall apply in the Community.

The Explanatory Notes in Annex 6 to the aforesaid Convention relative to the Annexes listed in subparagraph 1 shall apply as from the same date.

2. As from 1 January 1977, the specimen TIR carnet featuring in Annex I to the 1975 TIR Convention shall have the same legal force and the same effect in the Community as the TIR carnet of the 1959 Convention.

3. The texts of Annexes 1, 2, 3, 4, 5 and 7 to the 1975 TIR Convention and the Explanatory Notes in Annex 6 relative to those Annexes are contained in the Annex to this Regulation.

Article 2

The Commission shall inform the Executive Secretary of the Economic Commission for Europe of the provisions adopted in Article 1.

Article 3

This Regulation shall enter into force on the day following its publication in the *Official Journal of the European Communities.*

This Regulation shall be binding in its entirety and directly applicable in all Member States.

Done at Brussels, 21 December 1976.

For the Council

The President

A.P.L.M.M. van der STEE

ANNEX 1

SPECIMEN TIR CARNET

The TIR carnet is printed in French except for page 1 of the cover where the items are also printed in English. The 'rules regarding the use of the TIR carnet' given in French on page 2 of the cover are also printed in English on page 3 of the cover.

(Nom de l'organisme international)

CARNET TIR*

1. Valable pour prise en charge par le bureau de douane de départ jusqu'au ..... inclus
Valid for the acceptance of goods by the customs office of departure up to and including

2. Délivré par .....
Issued by

.....
(Nom de l'association émettrice / Name of issuing association)

3. Titulaire .....
Holder

.....
(Nom, adresse, pays / Name, address, country)

4. Signature du délégué de l'association émettrice et cachet de cette association :
Signature of authorized official of the issuing association and stamp of that association :

.....

5. Signature du secrétaire de l'organisme international :
Signature of the secretary of the international organization :

.....

(À remplir avant l'utilisation par le titulaire du carnet / To be completed before use by the holder of the carnet)

6. Pays de départ .....
Country of departure

7. Pays de destination .....
Country/Countries of destination (1)

.....

8. Numéro(s) d'immatriculation du (des) véhicule(s) routier(s) (1)
Registration No(s) of road vehicle(s) (1)

.....

9. Certificat(s) d'agrément du (des) véhicule(s) routier(s) (numéro et date) (1)
Certificate(s) of approval of road vehicle(s) (No and date) (1)

.....

10. Numéro(s) d'identification du (des) conteneur(s) (1)
Identification No(s) of container(s) (1)

.....

11. Observations diverses .....
Remarks

.....

12. Signature du titulaire du carnet :
Signature of the carnet holder :

.....

(1) Biffer la mention inutile.
Strike out whichever does not apply.

* Voir annexe 1 de la convention TIR, 1975, élaborée sous les auspices de la Commission économique des Nations unies pour l'Europe.

* See Annex 1 to the TIR Convention, 1975, prepared under the auspices of the United Nations Economic Commission for Europe.

RÈGLES RELATIVES À L'UTILISATION DU CARNET TIR

A. Généralités

1. **Émission:** Le carnet TIR sera émis dans le pays de départ ou dans le pays où le titulaire est établi ou domicilié.
2. **Langue:** Le carnet TIR est imprimé en français, à l'exception de la page 1 de la couverture dont les rubriques sont également imprimées en anglais; les règles relatives à l'utilisation du carnet TIR sont reproduites en version anglaise à la page 3 de ladite couverture. Par ailleurs, des feuillets supplémentaires donnant une traduction en d'autres langues du texte imprimé peuvent être ajoutés.
3. **Validité:** Le carnet TIR demeure valable jusqu'à l'achèvement de l'opération TIR au bureau de douane de destination, pour autant qu'il ait été pris en charge au bureau de douane de départ dans le délai fixé par l'association émettrice (rubrique 1 de la page 1 de la couverture et rubrique 4 des volets).
4. **Nombre de carnets:** Il sera établi un seul carnet TIR pour un ensemble de véhicules (véhicules couplés) ou pour plusieurs conteneurs chargés soit sur un seul véhicule soit sur un ensemble de véhicules [voir également la règle 10 sous d) ci-dessous].
5. **Nombre de bureaux de douane de départ et de destination:** Les transports effectués sous le couvert d'un carnet TIR peuvent comporter plusieurs bureaux de douane de départ et de destination, mais, sauf autorisation:
   a) les bureaux de douane de départ devront être situés dans le même pays;
   b) les bureaux de douane de destination ne pourront pas être situés dans plus de deux pays;
   c) le nombre total des bureaux de douane de départ et de destination ne pourra dépasser quatre [voir également la règle 10 sous e) ci-dessous].
6. **Nombre de feuillets:** Si le transport comporte un seul bureau de douane de départ et un seul bureau de douane de destination, le carnet TIR devra comporter au moins 2 feuillets pour le pays de départ, 3 feuillets pour le pays de destination, puis 2 feuillets pour chaque autre pays dont le territoire est emprunté. Pour chaque bureau de douane de départ ou de destination supplémentaire, 2 autres feuillets, respectivement 3 autres feuillets, seront nécessaires; en outre, il faudra ajouter 2 feuillets si les bureaux de douane de destination sont situés dans deux pays différents.
7. **Présentation aux bureaux de douane:** Le carnet TIR sera présenté avec le véhicule routier, l'ensemble de véhicules, le ou les conteneurs à chacun des bureaux de douane de départ, de passage et de destination. Au dernier bureau de douane de départ, la signature de l'agent et le timbre à date du bureau de douane doivent être apposés au bas du manifeste de tous les volets à utiliser pour la suite du transport (rubrique 19).

B. Manière de remplir le carnet TIR

8. **Grattage, surcharge:** Le carnet TIR ne comportera ni grattage ni surcharge. Toute rectification devra être effectuée en biffant les indications erronées et en ajoutant, le cas échéant, les indications voulues. Toute modification devra être approuvée par son auteur et visée par les autorités douanières.
9. **Indication relative à l'immatriculation:** Lorsque les dispositions nationales ne prévoient pas l'immatriculation des remorques et semi-remorques, on indiquera, en lieu et place du numéro d'immatriculation, le numéro d'identification ou de fabrication.
10. **Manifeste:**
    a) Le manifeste sera rempli dans la langue du pays de départ, à moins que les autorités douanières n'autorisent l'usage d'une autre langue. Les autorités douanières des autres pays empruntés se réservent le droit d'en exiger une traduction dans leur langue. En vue d'éviter des retards qui pourraient résulter de cette exigence, il est conseillé au transporteur de se munir des traductions nécessaires.
    b) Les indications portées sur le manifeste devraient être dactylographiées ou polycopiées de manière qu'elles soient nettement lisibles sur tous les feuillets. Les feuillets illisibles seront refusés par les autorités douanières.
    c) Lorsqu'il n'y a pas assez d'espace pour inscrire sur le manifeste toutes les marchandises transportées, des feuilles-annexes, du même modèle que le manifeste, ou des documents commerciaux comportant toutes les indications du manifeste peuvent être attachés aux volets. Dans ce cas, tous les volets devront porter les indications suivantes:
       i) nombre des feuilles-annexes (case 10),
       ii) nombre et nature des colis ou des objets ainsi que le poids brut total des marchandises énumérées sur ces feuilles-annexes (cases 11 à 13).
    d) Lorsque le carnet TIR couvre un ensemble de véhicules ou plusieurs conteneurs, le contenu de chaque véhicule ou de chaque conteneur sera indiqué séparément sur le manifeste. Cette indication devra être précédée du numéro d'immatriculation du véhicule ou du numéro d'identification du conteneur (rubrique 11 du manifeste).
    e) De même, s'il y a plusieurs bureaux de douane de départ ou de destination, les inscriptions relatives aux marchandises prises en charge ou destinées à chaque bureau de douane seront nettement séparées les unes des autres sur le manifeste.
11. **Listes de colisage, photos, plans, etc.:** Lorsque, pour l'identification des marchandises pondéreuses ou volumineuses, les autorités douanières exigeront que de tels documents soient annexés au carnet TIR, ces derniers seront visés par les autorités douanières et attachés à la page 2 de la couverture du carnet. Au surplus, une mention de ces documents sera faite dans la case 10 de tous les volets.
12. **Signature:** Tous les volets (rubriques 16 et 17) seront datés et signés par le titulaire du carnet TIR ou par son représentant.

C. Incidents ou accidents

13. S'il arrive en cours de route, pour une cause fortuite, qu'un scellement douanier soit rompu ou que des marchandises périssent ou soient endommagées, le transporteur s'adressera immédiatement aux autorités douanières s'il s'en trouve à proximité ou, à défaut, à d'autres autorités compétentes du pays où il se trouve. Ces dernières établiront dans le plus bref délai le procès-verbal de constat figurant dans le carnet TIR.
14. En cas d'accident nécessitant le transbordement sur un autre véhicule ou dans un autre conteneur, ce transbordement ne peut s'effectuer qu'en présence de l'une des autorités désignées à la règle 13 ci-dessus. Ladite autorité établira le procès-verbal de constat. À moins que le carnet ne porte la mention «marchandises pondéreuses ou volumineuses», le véhicule ou conteneur de substitution devra être agréé pour le transport de marchandises sous scellements douaniers. En plus, il sera scellé et le scellement apposé sera indiqué dans le procès-verbal de constat. Toutefois, si aucun véhicule ou conteneur agréé n'est disponible, le transbordement pourra être effectué sur un véhicule ou dans un conteneur non agréé, pour autant qu'il offre des garanties suffisantes. Dans ce dernier cas, les autorités douanières des pays suivants apprécieront si elles peuvent, elles aussi, laisser continuer dans ce véhicule ou conteneur le transport sous le couvert du carnet TIR.
15. En cas de péril imminent nécessitant le déchargement immédiat, partiel ou total, le transporteur peut prendre des mesures de son propre chef sans demander ou sans attendre l'intervention des autorités visées à la règle 13 ci-dessus. Il aura alors à prouver qu'il a dû agir ainsi dans l'intérêt du véhicule ou conteneur ou de son chargement et, aussitôt après avoir pris les mesures préventives de première urgence, avertira une des autorités visées à la règle 13 ci-dessus pour faire constater les faits, vérifier le chargement, sceller le véhicule ou conteneur et établir le procès-verbal de constat.
16. Le procès-verbal de constat restera joint au carnet TIR jusqu'au bureau de douane de destination.
17. Il est recommandé aux associations de fournir aux transporteurs, outre le modèle inséré dans le carnet TIR lui-même, un certain nombre de formules de procès-verbaux de constat rédigées dans la ou les langues des pays à traverser.

COUNTERFOIL No 1 (odd-numbered pages, white) of the TIR CARNET

1. Accepted by the customs office at .....
2. Under No .....
3. Seals or identification marks applied .....
4. ☐ Seals or identification marks found to be intact
5. Miscellaneous (route prescribed, customs office at which the load must be produced, etc.)

.....

.....

6. Customs officer's signature and customs office date stamp

.....

VOUCHER No 1

2. Customs office(s) of departure

1. ..... 2. .....

3. .....

For official use

1. TIR CARNET

3. Issued by (name of issuing association)

4. Valid for the acceptance of goods by the customs office of departure up to and including

5. Holder of the carnet (name, address and country)

6. *Country of departure*

7. *Country/countries of destination*

8. Registration No(s) of road vehicle(s)

9. Certificate(s) of approval (No and date)

10. Documents attached to the manifest

GOODS MANIFEST

11. (a) Load compartment(s) or container(s) (b) Marks and Nos of packages or articles	12. Number and type of packages or articles; description of goods	13. Gross weight (in kg)	18. Seals or identification marks applied (number, identification)

14. Total number of packages entered on the manifest, Destination:	Number
1. Customs office	
2. Customs office	
3. Customs office	

15. I declare the information in items 1 to 14 to be correct and complete

16. Place and date

17. Signature of holder or agent

.....

.....

19. Customs office of departure, customs officer's signature and customs office date stamp

.....

20. Certificate of acceptance of goods (customs office of departure or of entry *en route*)

☐ 21. Seals or identification marks found to be intact

22. Time limit for transit

23. Registered by the customs office at

under No

24. Miscellaneous (route prescribed, customs office at which the load must be produced, etc.)

25. Customs officer's signature and customs office date stamp

.....

COUNTERFOIL No 2 (even-numbered pages, green) of the TIR CARNET No

1. Arrival certified by the customs office at .....
2. ☐ Seals or identification marks found to be intact
3. Discharged ..... packages or articles (as specified in the manifest)
4. New seals affixed .....
5. Conditions of discharge (if any) .....

6. Customs officer's signature and customs office date stamp

VOUCHER No 2

2. Customs office(s) of departure

1. ..... 2. .....

3. .....

For official use

8. Registration No(s) of road vehicle(s)

9. Certificate(s) of approval (No and date)

1. TIR CARNET No

3. Issued by (name of issuing association)

4. Valid for the acceptance of goods by the customs office of departure up to and including

5. Holder of the carnet (name, address and country)

6. Country of departure

7. Country/countries of destination

10. Documents attached to the manifest

GOODS MANIFEST

11. (a) Load compartment(s) or container(s) (b) Marks and Nos of packages or articles	12. Number and type of packages or articles; description of goods	13. Gross weight (in kg)	18. Seals or identification marks applied (number, identification)

14. Total number of packages entered on the manifest, Destination:	Number
1. Customs office	
2. Customs office	
3. Customs office	

15. I declare the information in items 1 to 14 to be correct and complete

16. Place and date

17. Signature of holder or agent

.....

19. Customs office of departure, customs officer's signature and customs office date stamp

20. Certificate of acceptance of goods (customs office of departure or of entry *en route*)

☐ 21. Seals or identification marks found to be intact

22. Time limit for transit

23. Registered by the customs office at under No

24. Miscellaneous (route prescribed, customs office at which the load must be produced, etc.)

25. Customs officer's signature and customs office date stamp

26. Certificate of discharge (customs office of exit *en route* or of destination)

☐ 27. Seals or identification marks found to be intact

28. Number of packages discharged

29. Conditions of discharge (if any)

30. Customs officer's signature and customs office date stamp

VOUCHER INTENDED EXCLUSIVELY
for the customs office of destination
if so required

VOUCHER No 2 (pink)

2. Customs office(s) of departure

1. ..... 2. .....

3. .....

For official use

1. TIR CARNET

No

3. Issued by (name of issuing association)

4. Valid for the acceptance of goods by the customs office of departure up to and including

5. Holder of the carnet (name, address and country)

6. Country of departure

7. Country/countries of destination

8. Registration No(s) of road vehicle(s)

9. Certificate(s) of approval (No and date)

10. Documents attached to the manifest

GOODS MANIFEST

11. (a) Load compartment(s) or container(s) (b) Marks and Nos of packages or articles	12. Number and type of packages or articles; description of goods	13. Gross weight (in kg)	18. Seals or identification marks applied (number, identification)

14. Total number of packages entered on the manifest, Destination:	Number
1. Customs office	
2. Customs office	
3. Customs office	

15. I declare the information in items 1 to 14 to be correct and complete

16. Place and date

17. Signature of holder or agent

.....

.....

19. Customs office of departure, customs officer's signature and customs office date stamp

.....

20. Certificate of acceptance of goods (customs office of departure or of entry *en route*)

☐ 21. Seals or identification marks found to be intact

22. Time limit for transit

23. Registered by the customs office at under No

24. Miscellaneous (route prescribed, customs office at which the load must be produced, etc.)

25. Customs officer's signature and customs office date stamp

.....

26. Certificate of discharge (customs office of exit *en route* or of destination)

☐ 27. Seals or identification marks found to be intact

28. Number of packages discharged

29. Conditions of discharge (if any)

30. Customs officer's signature and customs office date stamp

.....

Verbal report (yellow)

Drawn up in accordance with Article 25 of the TIR Convention
(See also rules 13 to 17 regarding the use of the TIR carnet)

1. Customs office(s) of departure	2. **TIR CARNET** [redacted]
	3. Issued by
4. Registration No(s) of road vehicle(s) Identification No(s) of container(s)	5. Holder of the carnet
6. The customs seal(s) is/are intact ☐ not intact ☐	8. Remarks
7. The load compartment(s) or container(s) is/are intact ☐ not intact ☐	

9. ☐ No goods appeared to be missing ☐ The goods indicated in items 10 to 13 are missing (M) or have been destroyed (D) as indicated in column 12

10. (a) Load compartment(s) or container(s) (b) Marks and Nos of packages or articles	11. Number and type of packages or articles; description of goods	12. M or D	13. Remarks (give particulars of quantities missing or destroyed)

14. Date, place and circumstances of the accident

15. Measures taken to enable the TIR operation to continue

☐ affixing of new seals: number ..... description .....

☐ transfer of load (see item 16 below)

☐ other

16. If the goods have been transferred: description of road vehicle(s)/container(s) substituted

	Registration No	Approved Yes	Approved No	No of certificate of approval	Number and particulars of seals affixed
(a) vehicle	.....	☐	☐	.....	..... / .....
	.....	☐	☐	.....	..... / .....
	Identification No				
(b) container	.....	☐	☐	.....	..... / .....
	.....	☐	☐	.....	..... / .....

17. Authority which drew up this certified report	18. Endorsement of next customs office reached by the TIR transport
..... Place/Date/Stamp ..... Signature	..... Signature

☐ Mark the appropriate boxes with a cross.

RULES REGARDING THE USE OF THE TIR CARNET

A. General

1. **Issue:** The TIR carnet may be issued either in the country of departure or in the country in which the holder is established or resident.
2. **Language:** The TIR carnet is printed in French except for page 1 of the cover where the items are also printed in English; this page is a translation of the 'Rules regarding the use of the TIR carnet' given in French on page 2 of the cover. Additional sheets giving a translation of the printed text may also be inserted.
3. **Validity:** The TIR carnet remains valid until the completion of the TIR operation at the customs office of destination, provided that it has been taken under customs control at the customs office of departure within the time limit set by the issuing association (item 1 of page 1 of the cover and item 4 of the vouchers).
4. **Number of carnets:** Only one TIR carnet shall be required for a combination of vehicles (coupled vehicles) or for several containers loaded either on a single vehicle or on a combination of vehicles (see also rule 10 (d) below).
5. **Number of customs offices of departure and customs offices of destination:** Transport under cover of a TIR carnet may involve several customs offices of departure and destination, but, unless otherwise authorized :
   (a) the customs offices of departure must be situated in the same country;
   (b) the customs offices of destination may not be situated in more than two countries;
   (c) the total number of customs offices of departure and destination may not exceed four (see also rule 10 (e) below).
6. **Number of forms:** Where there is only one customs office of departure, and one customs office of destination, the TIR carnet must contain at least two sheets for the country of departure, three sheets for the country of destination and two sheets for each country traversed. For each additional customs office of departure two extra sheets and for each additional customs office of destination three extra sheets shall be required; in addition, there must be two more sheets if the customs offices of destination are situated in two different countries.
7. **Presentation at customs offices:** The TIR carnet shall be presented with the road vehicle, combination of vehicles, or container(s) at each customs office of departure, customs office *en route* and customs office of destination. At the last customs office of departure, the customs officer shall sign and date stamp item 19 below the manifest on all vouchers to be used on the remainder of the journey.

B. How to fill in the TIR carnet

8. **Erasures, over-writing:** No erasures or over-writing shall be made on the TIR carnet. Any corrections shall be made by crossing out the incorrect particulars and adding, if necessary, the required particulars. Any change shall be initialled by the person making it and endorsed by the customs authorities.
9. **Information concerning registration:** When national legislation does not provide for registration of trailers and semi-trailers, the identification of manufacturer's number shall be shown instead of the registration number.
10. **The manifest:**
    (a) The manifest must be completed in the language of the country of departure, unless the customs authorities allow another language to be used. The customs authorities of the other countries traversed reserve the right to require its translation into their own language. In order to avoid delays which might ensue from this requirement, carriers are advised to supply the driver of the vehicle with the requisite translations.
    (b) The information on the manifest should be typed or multicopied in such a way as to be clearly legible on all the sheets. Illegible sheets will not be accepted by the customs authorities.
    (c) When there is not enough space in the manifest to enter all the goods carried, separate sheets of the same model as the manifest or commercial documents providing all the information required by the manifest may be attached to the vouchers. In such cases, all the vouchers must contain the following particulars:
    (i) the number of sheets attached (box 10),
    (ii) the number and type of packages or articles and the total gross weight of the goods listed on the attached sheets (boxes 11 to 13).
    (d) When the TIR carnet covers a combination of vehicles or several containers, the contents of each vehicle or each container shall be indicated separately on the manifest. This information shall be preceded by the registration number of the vehicle or the identification number of the container (item 11 of the manifest).
    (e) Likewise, if there are several customs offices of departure or of destination, the entries concerning the goods taken under customs control at, or intended for, each customs office shall be clearly separated from eachother on the manifest.
11. **Packing lists, photographs, plans, etc.:** When such documents are required by the customs authorities for the identification of heavy or bulky goods, they shall be endorsed by the customs authorities and attached to page 2 of the cover of the carnet. In addition, a reference shall be made to these documents in box 10 of all vouchers.
12. **Signature:** All vouchers (items 16 and 17) must be dated and signed by the holder of the TIR carnet or his agent.

C. Incidents or accidents

13. In the event of customs seals being broken or goods being destroyed or damaged by accident *en route* the carrier shall immediately contact the customs authorities, if there are any near at hand, or, if not, any other competent authorities of the country he is in. The authorities concerned shall draw up with the minimum delay the certified report which is contained in the TIR carnet.
14. In the event of an accident necessitating transfer of the load to another vehicle or another container, this transfer may be carried out only in the presence of one of the authorities mentioned in rule 13 above. The said authority shall draw up the certified report. Unless the carnet carries the words 'Heavy or bulky goods', the vehicle or container substituted must be one approved for the transport of goods under customs seals. Furthermore, it shall be sealed and details of the seal affixed shall be indicated in the certified report. However, if no approved vehicle or container is available, the goods may be transferred to an unapproved vehicle or container, provided it affords adequate safeguards. In the latter event, the customs authorities of succeeding countries shall judge whether they, too, can allow the transport under cover of the TIR carnet to continue in that vehicle or container.
15. In the event of imminent danger necessitating immediate unloading of the whole or of part of the load, the carrier may take action on his own initiative without requesting, or waiting for action by the authorities mentioned in rule 13 above. It shall then be for him to furnish proof that he was compelled to take such action in the interests of the vehicle or container or of the load and, as soon as he has taken such preventive measures as the emergency may require, he shall notify one of the authorities mentioned in rule 13 above in order that the facts may be verified, the load checked, the vehicle or container sealed and the certified report drawn up.
16. The certified report shall remain attached to the TIR carnet until the customs office of destination is reached.
17. In addition to the model form inserted in the TIR carnet itself, associations are recommended to furnish carriers with a supply of certified report forms in the language or languages of the countries of transit.

ANNEX 2

REGULATIONS ON TECHNICAL CONDITIONS APPLICABLE TO ROAD VEHICLES WHICH MAY BE ACCEPTED FOR INTERNATIONAL TRANSPORT UNDER CUSTOMS SEAL

Article 1

Basic principles

Approval for the international transport of goods under customs seal may be granted only to vehicles, the load compartments of which are constructed and equipped in such a manner that:

(a) no goods can be removed from, or introduced into, the sealed part of the vehicle without leaving obvious traces of tampering or without breaking the customs seal;

(b) customs seals can be simply and effectively affixed to them;

(c) they contain no concealed spaces where goods may be hidden;

(d) all spaces capable of holding goods are readily accessible for customs inspection.

Article 2

Structure of load compartments

1. To meet the requirements of Article 1 of these Regulations:

(a) the constituent parts of the load compartment (sides, floor, doors, roof, uprights, frames, cross-pieces, etc.) shall be assembled either by means of devices which cannot be removed and replaced from the outside without leaving obvious traces or by such methods as will produce a structure which cannot be modified without leaving obvious traces. When the sides, floor, doors and roof are made up of various components, these shall meet the same requirements and be of sufficient strength;

(b) doors and all other closing systems (including stopcocks, manhole-covers, flanges, etc.) shall be fitted with a device on which customs seals can be fixed. This device must be such that it cannot be removed and replaced from the outside without leaving obvious traces, or the door or fastening be opened without breaking the customs seals. The latter shall be adequately protected. Opening roofs shall be permitted;

(c) apertures for ventilation and drainage shall be provided with a device preventing access to the interior of the load compartment. This device must be such that it cannot be removed and replaced from the outside without leaving obvious traces.

2. Notwithstanding the provisions of Article 1 (c) of these Regulations, constituent parts of the load compartment which, for practical reasons, have to include empty spaces (for example, between the partitions of a double wall) shall be permitted. In order that the said spaces cannot be used to conceal goods:

(i) where it covers the full height from floor to roof, or, in other cases, where the space between it and the outer wall is completely enclosed, the lining inside the load compartment shall be so fitted that it cannot be removed and replaced without leaving obvious traces, and

(ii) where a lining is of less than full height and the spaces between the lining and the outer wall are not completely enclosed, and in all other cases where spaces occur in the construction of a load compartment, the number of such spaces shall be kept to a minimum and these spaces shall be readily accessible for customs inspection.

3. Windows shall be allowed provided that they are made of materials of sufficient strength and that they cannot be removed and replaced from the outside without leaving obvious traces. Glass shall nevertheless be permitted, but in this case the window shall be fitted with a fixed metal grille which cannot be removed from the outside; the mesh of the grille shall not exceed 10 mm.

4. Openings made in the floor for technical purposes, such as lubrication, maintenance and filling of the sand-box, shall be allowed only on condition that they are fitted with a cover capable of being fixed in such a way as to render the load compartment inaccessible from the outside.

Article 3

Sheeted vehicles

1. Where appliacble, the provisions of Articles 1 and 2 of these Regulations shall apply to sheeted vehicles. In

addition, these vehicles shall conform to the provisions of this Article.

2. The sheet shall be either of strong canvas or of plastic-covered or rubberized cloth, which shall be of sufficient strength and unstretchable. It shall be in good condition and made up in such a way that once the closing device has been secured, it is impossible to gain access to the load compartment without leaving obvious traces.

3. If the sheet is made up of several pieces, their edges shall be folded into one another and sewn together with two seams at least 15 mm apart. These seams shall be made as shown in Sketch No 1 appended to these Regulations; however, where in the case of certain parts of the sheet (such as flaps and reinforced corners) it is not possible to assemble the pieces in that way, it shall be sufficient to fold the edge of the top section and make the seams as shown in Sketch No 2 or 2 (a) appended to these Regulations. One of the seams shall be visible only from the inside and the colour of the thread used for that seam shall be clearly different from the colour of the sheet itself and from the colour of the thread used for the other seam. All seams shall be machine-sewn.

4. If the sheet is of plastic-covered cloth, and is made up of several pieces, the pieces may alternatively be welded together in the manner shown in Sketch No 3 appended to these Regulations. The edges of the pieces shall overlap by at least 15 mm. The pieces shall be fused together over the whole width of the overlap. The edge of the outer sheet shall be covered with a band of plastic material at least 7 mm wide, affixed by the same welding process. The plastic band and the sheet on each side of it for a width of at least 3 mm shall have a clearly-defined uniform relief pattern stamped on them. The pieces shall be welded in such a way that they cannot be separated and rejoined without leaving obvious traces.

5. Repairs shall be made in accordance with the method described in Sketch No 4 appended to these Regulations; the edges shall be folded into one another and sewn together with two visible seams at least 15 mm apart; the colour of the thread visible from the inside shall be different from that of the thread visible from the outside and from that of the sheet itself; all seams shall be machine-sewn. When a sheet which has been damaged near the edges is repaired by replacing the damaged part by a patch, the seam can also be made in accordance with the provisions of paragraph 3 of this Article and Sketch No 1 appended to these Regulations. Sheets of plastic-covered cloth may alternatively be repaired in accordance with the method described in paragraph 4 of this Article, but in that case the plastic band must be affixed to both sides of the sheet, the patch being fitted on the inside of the sheet.

6. (a) The sheet shall be fixed to the vehicle in strict compliance with the conditions set forth in Article 1 (a) and (b) of these Regulations. The following types of fastening shall be provided:

(i) metal rings fixed to the vehicles,

(ii) eyelets let into the edge of the sheet,

(iii) a fastening passing through the rings above the sheet and visible from the outside for its entire length.

The sheet shall overlap solid parts of the vehicle by at least 250 mm, measured from the centre of the securing rings, unless the system of construction of the vehicle in itself prevents all access to the load compartment.

(b) When any edge of a sheet is to be permanently secured to a vehicle, the joint shall be continuous and effected by means of solid devices.

7. The sheet shall be supported by an adequate superstructure (uprights, sides, arches, slats, etc.).

8. The spaces between the rings and the spaces between the eyelets shall not exceed 200 mm. The eyelets shall be reinforced.

9. The following fastenings shall be used:

(a) steel wire ropes of at least 3 mm diameter; or

(b) ropes of hemp or sisal of at least 8 mm diameter encased in a transparent sheath of unstretchable plastic.

Wire ropes may have a transparent sheath of unstretchable plastic.

metal end-piece at each end. The fastener of each metal end-piece shall include a hollow rivet passing through the rope so as to allow the introduction of the thread 10. Each rope shall be in one piece and have a hard or strap of the customs seal. The rope shall remain visible on either side of the hollow rivet so that it is possible to ensure that the rope is in one piece (see Sketch No 5 appended to these Regulations).

11. At the openings in the sheet, used for loading and unloading, the two edges of the sheet shall have an adequate overlap. They shall also be fastened by:

(a) a flap sewn or welded in accordance with paragraphs 3 and 4 of this Article;

(b) rings and eyelets meeting the conditions of paragraph 8 of this Article; and

(c) a thong made of appropriate material, in one piece and unstretchable, at least 20 mm wide and 3 mm thick, passing through the rings and holding together the two edges of the sheet and the flap; the thong shall

be secured inside the sheet and fitted with an eyelet to take the rope mentioned in paragraph 9 of this Article.

A flap shall not be required if a special device, such as a baffle plate, is fitted, which prevents access to the load compartment without leaving obvious traces.

Sketch No 1

Sheet made of several pieces sewn together

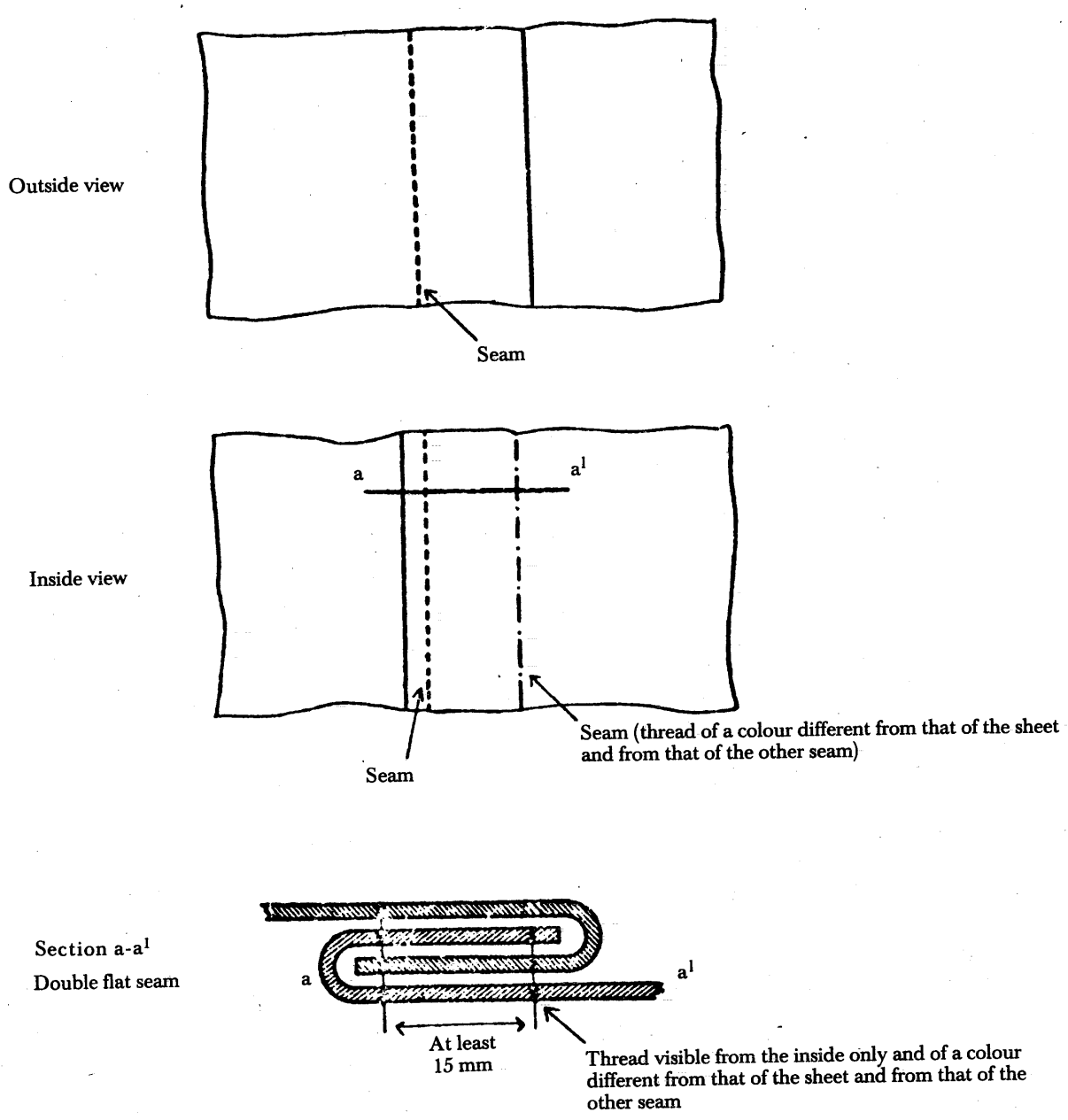

Sketch No 2

Sheet made of several pieces sewn together

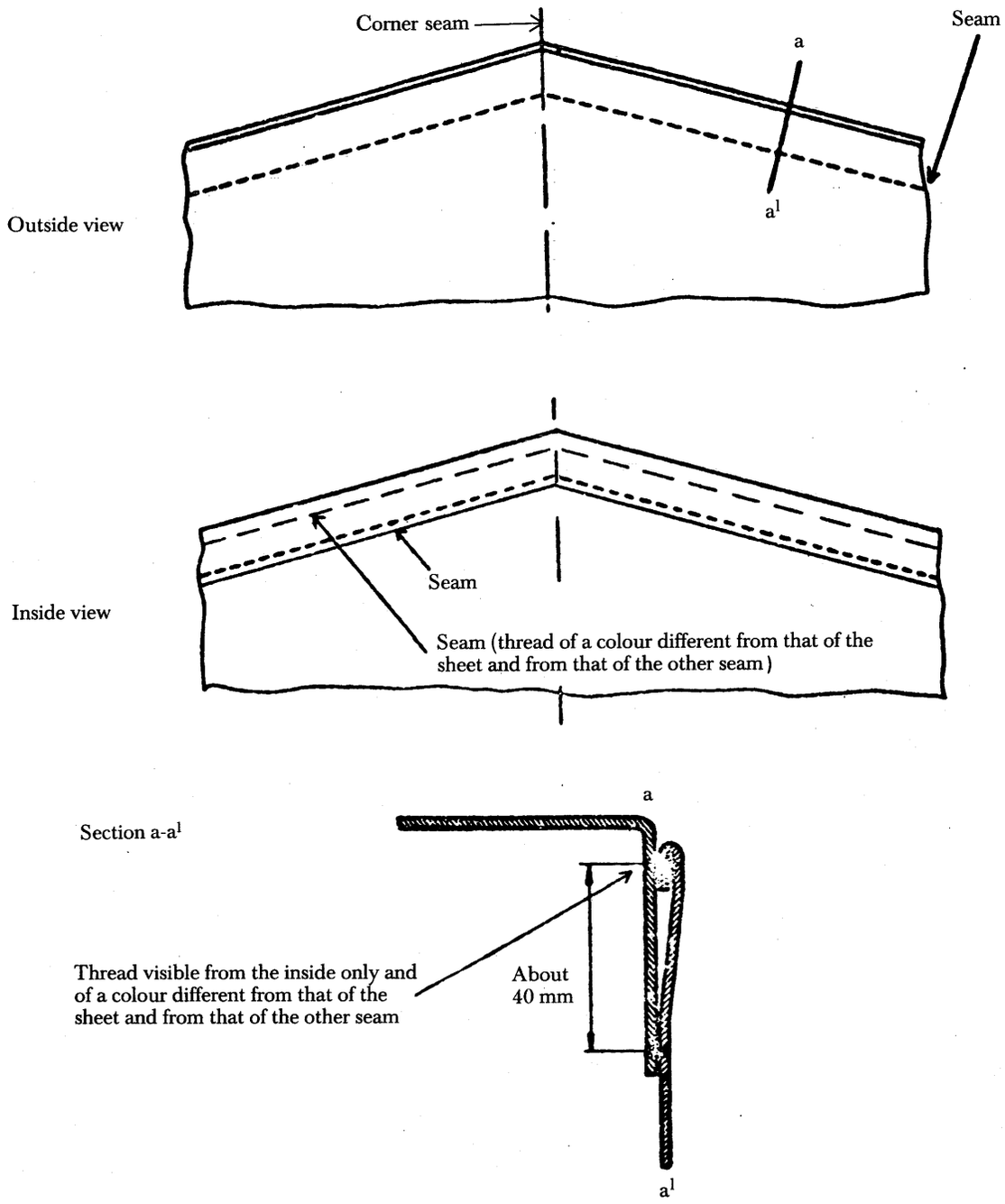

Sketch No 2 (a)

Sheet made of several pieces sewn together

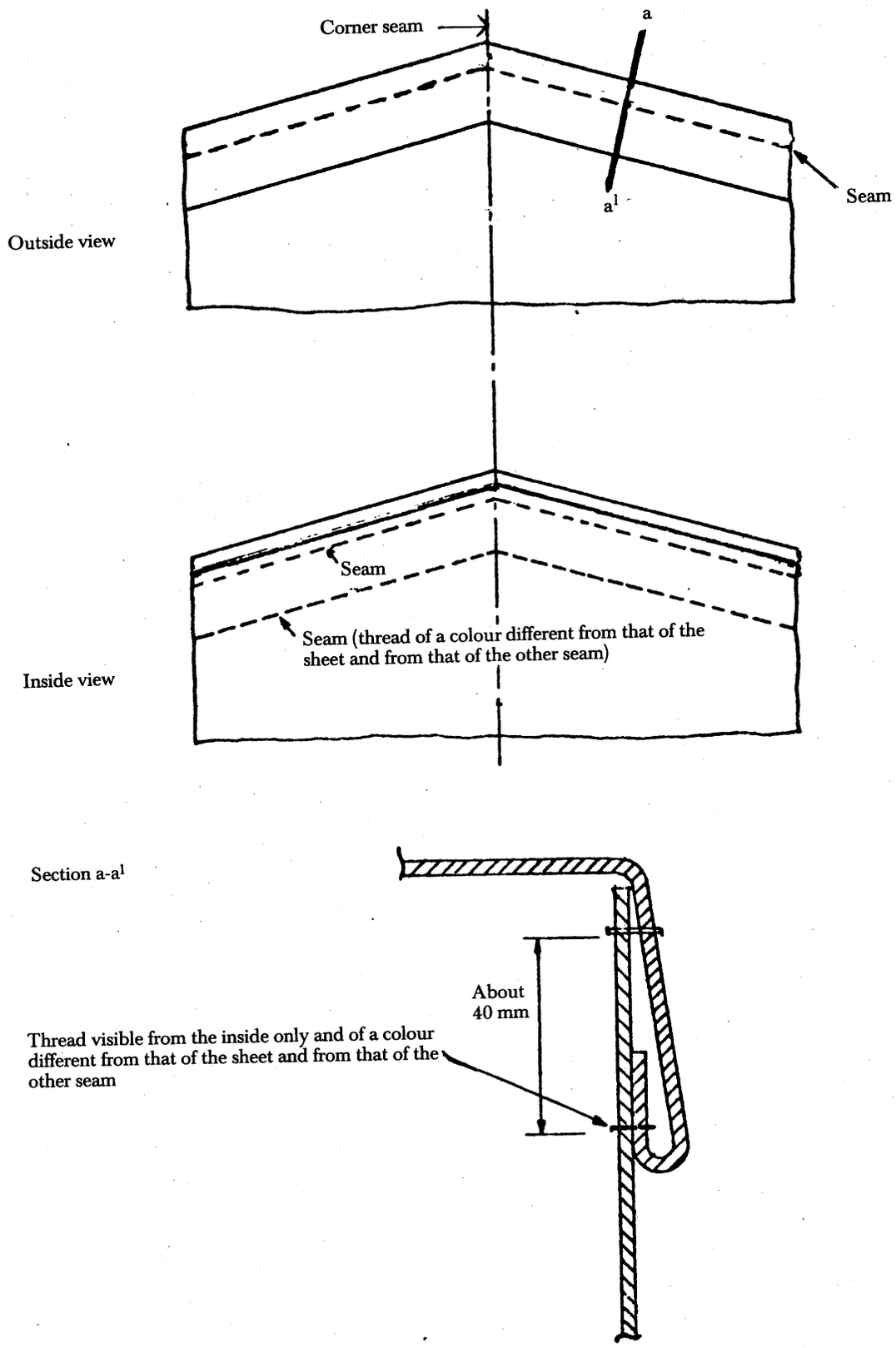

Sketch No 3

Sheet made of several pieces welded together

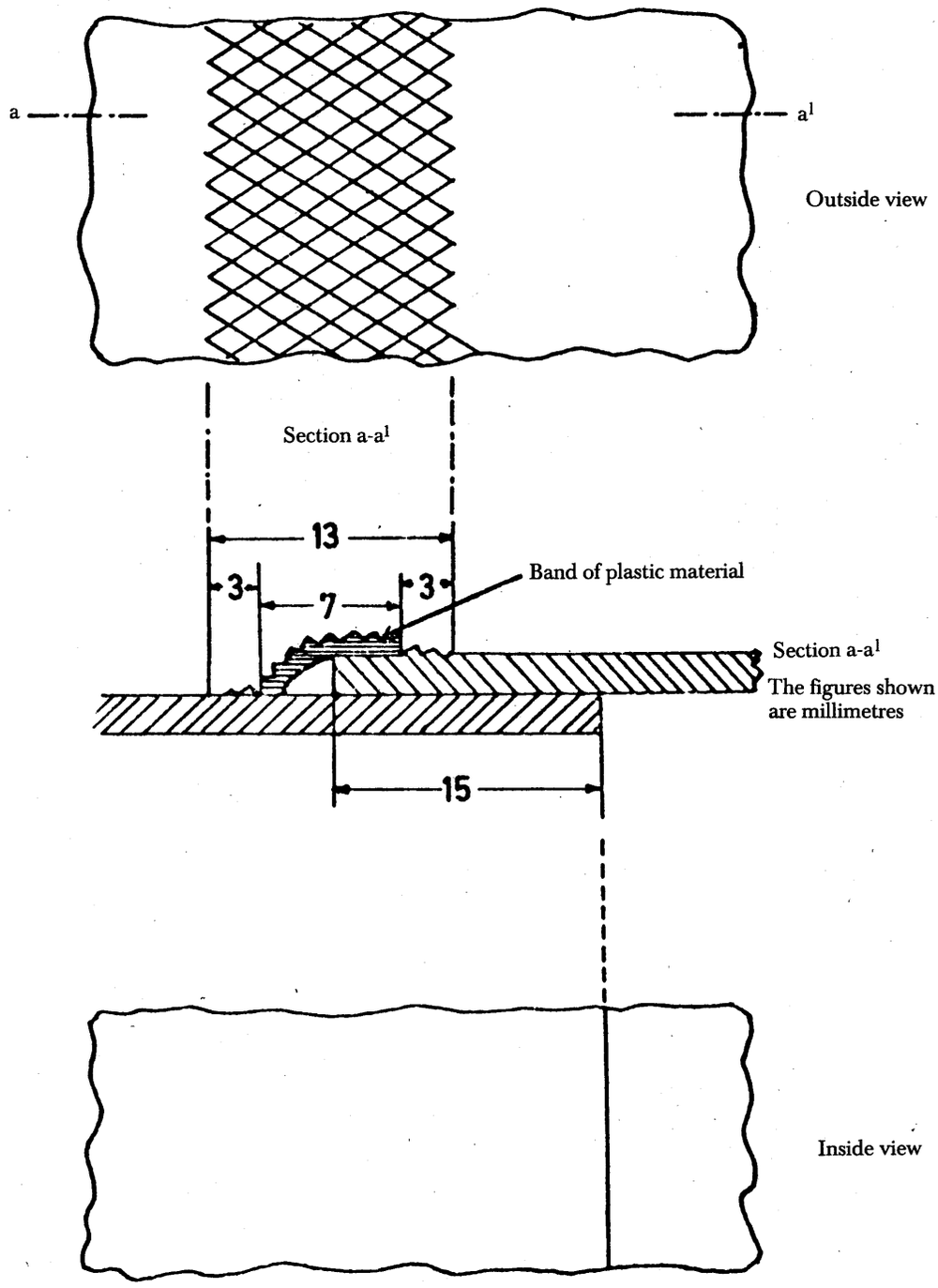

Sketch No 4

Repair of the sheet

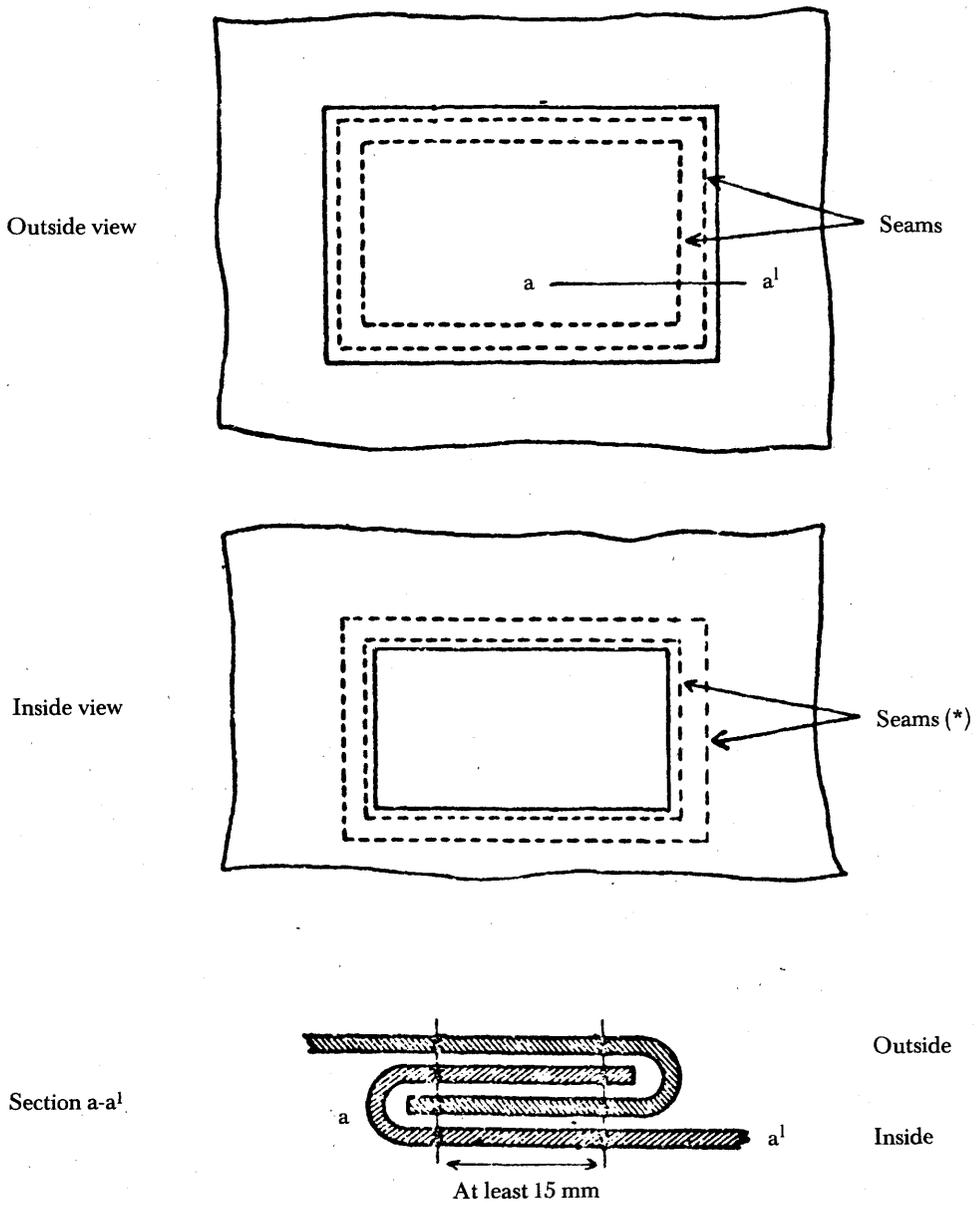

(*) Threads visible from inside shall be of a colour different from that of the threads visible from the outside and from that of the sheet.

Sketch No 5

Example of end-piece

1. **Side view:** Front

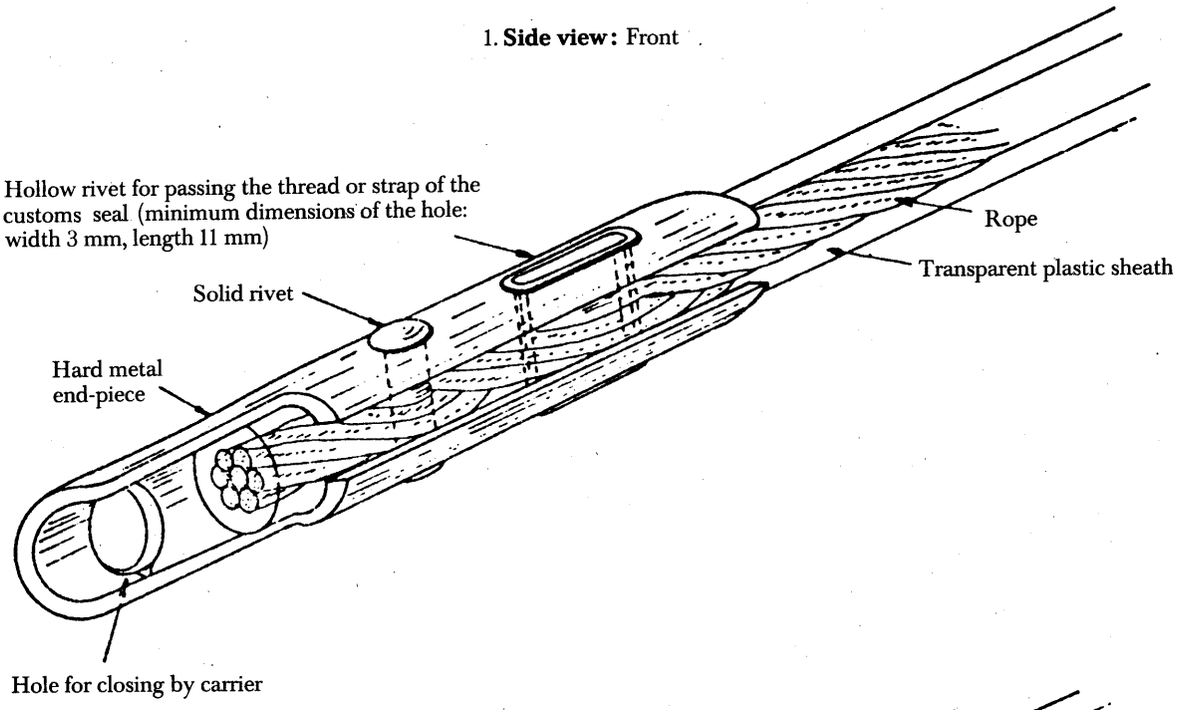

2. **Side view:** Back

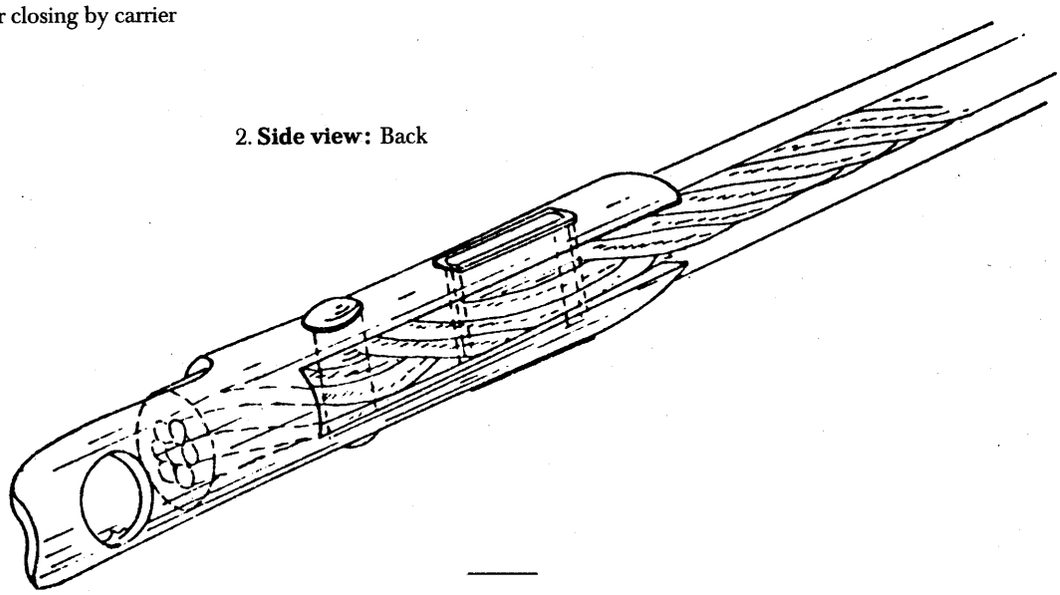

ANNEX 3

PROCEDURE FOR THE APPROVAL OF ROAD VEHICLES COMPLYING WITH THE TECHNICAL CONDITIONS SET FORTH IN THE REGULATIONS CONTAINED IN ANNEX 2

General

1. Road vehicles may be approved by one of the following procedures:

(a) individually; or

(b) by design type (series of road vehicles).

2. An approval certificate conforming to the standard form of Annex 4 shall be issued for approved vehicles. This certificate shall be printed in the language of the country of issue and in French or English. When the authority which has granted the approval deems it necessary, photographs or diagrams authenticated by that authority shall be attached to the certificate. The number of those documents shall then be inserted by that authority under item 6 of the approval certificate.

3. The approval certificate shall be kept on the road vehicle.

4. Road vehicles shall be produced every two years, for the purposes of inspection and of renewal of approval, where appropriate, to the competent authorities of the country in which the vehicle is registered or, in the case of unregistered vehicles, of the country in which the owner or user is resident.

5. If a road vehicle no longer complies with the technical conditions prescribed for its approval, it shall, before it can be used for the transport of goods under cover of TIR carnets, be restored to the condition which had justified its approval so as to comply again with the said technical conditions.

6. If the essential characteristics of a road vehicle are changed, the vehicle shall cease to be covered by the approval and shall be reapproved by the competent authority before it can be used for the transport of goods under cover of TIR carnets.

7. The competent authorities of the country of registration of the vehicle or, in the case of vehicles for which registration is not required, the competent authorities of the country where the owner or user of the vehicle is established may, as the case may be, withdraw or renew the approval certificate or issue a new approval certificate in the circumstances set out in Article 14 of this Convention and in paragraphs 4, 5 and 6 of this Annex.

Procedure for individual approval

8. The owner, the operator or the representative of either shall apply to the competent authority for individual approval. The competent authority shall inspect the road vehicle produced in accordance with the general rules laid down in paragraphs 1 to 7 above and shall satisfy itself that the vehicle complies with the technical conditions prescribed in Annex 2, and after approval shall issue a certificate conforming to the model in Annex 4.

Procedure for approval by design type (series of road vehicles)

9. Where road vehicles are manufactured by type series, the manufacturer may apply to the competent authority of the country of manufacture for approval by design-type.

10. The manufacturer shall state in his application the identification numbers or letters which he assigns to the type of road vehicle to which his application for approval relates.

11. The application shall be accompanied by drawings and a detailed design specification of the type of road vehicle to be approved.

12. The manufacturer shall give an undertaking in writing that he will:

(a) produce to the competent authority such vehicles of the type concerned as that authority may wish to examine;

(b) permit the competent authority to examine further units at any time during the production of the type series concerned;

(c) advise the competent authority of any change, however small, in the design or specification before proceeding with such change;

(d) mark the road vehicles in a visible place with the identification numbers or letters of the design-type and the serial number of the vehicle in the type series (manufacturer's number);

(e) keep a record of vehicles manufactured to the approved design-type.

13. The competent authority shall state what changes, if any, must be made to the proposed design-type in order that approval may be granted.

14. No approval by design-type shall be granted unless the competent authority has satisfied itself by examination of one or more vehicles manufactured to the design-type concerned that vehicles of that type comply with the technical conditions prescribed in Annex 2.

15. The competent authority shall notify the manufacturer in writing of its decision to grant approval by design-type. This decision shall be dated and numbered. The authority which took the decision shall be clearly designated.

16. The competent authority shall take the necessary steps to issue an approval certificate, which it has duly signed, in respect of every vehicle built in conformity with an approved design-type.

17. The holder of the approval certificate shall, before using the vehicle for the carriage of goods under the cover of a TIR carnet, fill in, as may be required, on the approval certificate:

— the registration number given to the vehicle (item 1) or,

— in the case of a vehicle not subject to registration, particulars of his name and business address (item 8).

18. When a vehicle which has been approved by design-type is exported to another country which is a Contracting Party to this Convention, no further approval procedure shall be required in that country on account of its importation.

Procedure for endorsement of the certificate of approval

19. When an approved vehicle, carrying goods under cover of a TIR carnet, is found to have major defects, the competent authorities of Contracting Parties may either refuse to allow the vehicle to continue its journey under a TIR carnet, or allow the vehicle to continue its journey under a TIR carnet on its territory while taking the necessary security precautions. The approved vehicle must be restored to a satisfactory state as rapidly as possible, and in any case before it is again used for the transport of goods under cover of a TIR carnet.

20. In each of these cases the customs authorities shall make an appropriate endorsement in item 10 of the certificate of approval of the vehicle. When the vehicle has been restored to a condition which justifies approval, it shall be presented to the competent authorities of a Contracting Party who shall revalidate the certificate by adding an endorsement to item 11 cancelling the earlier observations. No vehicle, the certificate of which has been endorsed at item 10 under the provisions of the preceding paragraph, may again be used for the transport of goods under a TIR carnet until it has been restored to a satisfactory condition and until the endorsement in item 10 has been cancelled as stated above.

21. Each endorsement made on the certificate shall be dated and authenticated by the customs authorities.

22. When a vehicle is found to have defects which the customs authorities consider to be of minor importance and not involving the risk of smuggling, the continued use of the vehicle for the transport of goods under cover of a TIR carnet can be authorized. The holder of the approval certificate shall be notified of the defects and shall restore his vehicle to a satisfactory state within a reasonable time.

ANNEX 4

MODEL CERTIFICATE OF APPROVAL OF A ROAD VEHICLE

(Cover page)

APPROVAL CERTIFICATE

of a road vehicle for the transport of goods under customs seal

CERTIFICATE No . . . .

TIR Convention of . . . . . 19 . .

Issued by (competent authority)

(fold)

(Back page)

IMPORTANT NOTICE

1. When the authority which has granted the approval deems it necessary, photographs or diagrams authenticated by that authority, shall be attached to the approval certificate. The number of those documents shall then be inserted by the competent authority, under item 6 of the certificate.

2. The certificate shall be kept on the road vehicle.

3. Road vehicles shall be produced every two years, for the purposes of inspection and of renewal of approval where appropriate, to the competent authorities of the country in which the vehicle is registered or, in the case of unregistered vehicles, of the country in which the owner or user is resident.

4. If a road vehicle no longer complies with the technical conditions prescribed for its approval, it shall, before it can be used for the transport of goods under cover of TIR carnets, be restored to the condition which had justified its approval so as to comply again with the said technical conditions.

5. If the essential characteristics of a road vehicle are changed, the vehicle shall cease to be covered by the approval and shall be reapproved by the competent authority before it can be used for the transport of goods under cover of TIR carnets.

Certificate of approval No

Identification

1. Registration No .....
2. Type of vehicle .....
3. Chassis No .....
4. Trade mark (or name of manufacturer) .....
5. Other particulars .....
6. Number of Annexes .....

7. Approval

☐ individual approval

☐ approval by design type
(mark applicable alternative with an 'X')

Valid until

Place .....

Date .....

Signature .....

Stamp

8. Holder (for unregistered vehicles only)

Name and address .....

9. Renewals

Valid until			
Place			
Date			
Signature			
Stamp			

(fold)

Remarks

(reserved for the use of competent authorities)

10. Defects noted		11. Rectification of defects	
Authority	Stamp	Authority	Stamp
Signature		Signature	
10. Defects noted		11. Rectification of defects	
Authority	Stamp	Authority	Stamp
Signature		Signature	
10. Defects noted		11. Rectification of defects	
Authority	Stamp	Authority	Stamp
Signature		Signature	

12. Other remarks

Important notice overleaf

ANNEX 5

TIR PLATES

1. The dimensions of the plates shall be 250 × 400 mm.

2. The letters 'TIR' in capital Latin characters shall be 200 mm high and their strokes at least 20 mm wide. The letters shall be white on a blue background.

ANNEX 6

EXPLANATORY NOTES

INTRODUCTION

(i) In accordance with the provisions of Article 43 of this Convention, the Explanatory Notes interpret certain provisions of this Convention and of its Annexes. They also describe certain recommended practices.

(ii) The Explanatory Notes do not modify the provisions of this Convention or of its Annexes but merely make their contents, meaning and scope more precise.

(iii) In particular, having regard to the provisions of Article 12 of this Convention and of Annex 2 relating to the technical conditions for the approval of road vehicles for transport under customs seal, the Explanatory Notes specify, where appropriate, the construction techniques to be accepted by the Contracting Parties as complying with those provisions. The Explanatory Notes also specify, where appropriate, which construction techniques do not comply with those provisions.

(iv) The Explanatory Notes provide a means of applying the provisions of this Convention and of its Annexes so as to take into account the development of technology and economic requirements.

2. ANNEX 2

2.2. *Article 2*

2.2.1.(a) **Subparagraph 1 (a) — Assembly of constituent parts**

(a) Where joining devices (rivets, screws, bolts and nuts, etc.) are used, a sufficient number of such devices shall be inserted from outside, traverse the assembled constituent parts, protrude inside and there be firmly secured (e.g. riveted, welded, bushed or bolted and swaged or welded on the nut). However, coventional rivets (i.e. rivets whose placing requires handling from both sides of the assembly of constituent parts) may be inserted from the inside. Notwithstanding the above, load compartment floors may be secured by means of self-tapping screws, or self-drilling rivets or rivets inserted by means of an

explosive charge, when placed from inside and passing at right-angles through the floor and the metallic cross-pieces underneath, on condition, except in the case of self-tapping screws, that some of their ends be flush with the level of the outside part of the cross-piece or be welded on to it.

(b) The competent authority shall determine what joining devices, and how many of them, must fulfil the requirements of subparagraph (a) of this note; they shall do so by making sure that the constituent parts so assembled cannot be displaced and replaced without leaving obvious traces. The choice and placing of other joining devices are not subject to any restriction.

(c) Joining devices which can be removed and replaced from one side without leaving obvious traces (i.e. without requiring handling from both sides of the constituent parts to be assembled) shall not be allowed under subparagraph (a) of this note. Examples of such devices are expansion rivets, blind rivets and the like.

(d) The assembly methods described above shall apply to special vehicles, for example to insulated vehicles, refrigerated vehicles and tank-vehicles in so far as they are not incompatible with the technical requirements which such vehicles must fulfil having regard to their use. Where, due to technical reasons, it is not practicable to secure parts in the manner described in subparagraph (a) of this note, the constituent parts may be joined by means of the devices mentioned in subparagraph (c) of this note provided that the devices used on the inner face of the wall are not accessible from the outside.

2.2.1.(b) **Subparagraph 1 (b) — Doors and other closing systems**

(a) The device on which customs seals can be fixed must:

(i) be secured by welding, or by not less than two joining devices conforming to subparagraph (a) of Explanatory Note 2.2.1 (a), or

(ii) be so designed that when the load compartment has been closed and sealed the device cannot be removed without leaving obvious traces.

It must also:

(iii) incorporate holes of not less than 11 mm in diameter or slots of at least 11 mm in length by 3 mm in width, and

(iv) afford equal security whatever type of seal is used.

(b) Butt hinges, strap hinges, hinge-pins and other devices for hanging doors and the like must be secured in conformity with the requirements of subparagraphs (a) (i) and (ii) of this note. Moreover, the various components of such devices (e.g. hingeplates, pins or swivels) must be so fitted that they cannot be removed or dismantled when the load compartment is closed and sealed without leaving obvious traces. However, where such a device is not accessible from outside it will suffice if, when the door or the like has been closed and sealed, it cannot be detached from the hinge or similar device without leaving obvious traces. Where a door or closure-device has more than two hinges, only those two hinges nearest to the extremities of the door need to be fixed in conformity with the requirements of subparagraph (a) (i) and (ii) above.

(c) Exceptionally, in the case of vehicles having insulated load compartments, the customs sealing device, the hinges and any fittings, the removal of which would give access to the interior of the load compartment or to spaces in which goods could be concealed, may be fixed to the doors of such load compartments by means of set bolts or set screws which are inserted from the

outside but which do not otherwise meet the requirements of Explanatory Note 2.2.1 (a), subparagraph (a) above, on condition that:

(i) the tails of the set bolts or set screws are fixed into a tapping plate or similar device fitted behind the outer layer or layers of the door structure, and

(ii) the heads of the appropriate number of set bolts or set screws are so welded to the customs sealing device, hinges, etc., that they are completely deformed and that the set bolts or set screws cannot be removed without leaving visible signs of tampering [1].

The term 'insulated load compartment' is to be taken to include refrigerated and isothermic load compartments.

(d) Vehicles comprising a large number of such closures as valves, stopcocks, manhole covers, flanges and the like must be designed so as to keep the number of customs seals to a minimum. To this end, neighbouring closures must be interconnected by a common device requiring only one customs seal, or must be provided with a cover meeting the same purpose.

(e) Vehicles with opening roofs must be constructed in such a manner as to permit sealing with a minimum number of customs seals.

2.2.1.(c) — 1. **Subparagraph 1 (c) — Ventilation apertures**

(a) Their greatest dimension must, in principle, not exceed 400 mm.

(b) Apertures permitting direct access to the load compartment, must be obstructed by means of wire gauze or perforated metal screens (maximum dimension of holes: 3 mm in both cases) and protected by welded metal lattice work (maximum dimension of holes: 10 mm).

(c) Apertures not permitting direct access to the load compartment (e.g. because of elbow or baffle-plate systems) must be provided with the same devices, in which, however, the dimensions of the holes may be as much as 10 and 20 mm respectively.

(d) Where openings are made in sheets, the devices referred to in subparagraph (b) of this note must in principle be prescribed. However, blocking devices in the form of a perforated metal screen fitted outside, and wire or other gauze fitted inside, will be allowed.

(e) Identical non-metal devices may be allowed provided that the holes are of the requisite dimensions and the material used is strong enough to prevent the holes from being substantially enlarged without visible damage. In addition, it must be impossible to replace the ventilation device by working from one side of the sheet only.

2.2.1.(c) — 2. **Subparagraph 1 (c) — Drainage apertures**

(a) Their greatest dimension must, in principle, not exceed 35 mm.

(b) Apertures permitting direct access to the load compartment must be provided with the devices described in subparagraph (b) of Explanatory Note 2.2.1 (c) — 1 for ventilation apertures.

(c) When drainage apertures do not permit direct access to the load compartment, the devices referred to in subparagraph (b) of this note will not be prescribed, on condition that the apertures are provided with a reliable baffle system readily accessible from inside the load compartment.

[1] See Sketch No 1 appended to this Annex.

2.3. *Article 3*

2.3.3. **Paragraph 3 — Sheets made up of pieces**

(a) The several pieces constituting one sheet may be made of different materials conforming to the provisions of Article 3 (2) of Annex 2.

(b) Any arrangement of the pieces which adequately guarantees security will be allowed in making up the sheet, on condition that the pieces are assembled in conformity with the requirements of Article 3 of Annex 2.

2.3.6.(a) **Subparagraph 6 (a) — Vehicles with sliding rings**

Metal securing rings sliding on metal bars fixed to the vehicles are acceptable for the purpose of this paragraph (see Sketch No 2 appended to this Annex) provided that:

(a) the bars are affixed to the vehicles at maximum spacings of 60 cm and in such a manner that they cannot be removed and replaced without leaving obvious traces;

(b) the rings are made with a double hoop or equipped with a central bar and made in one piece without the use of welding; and

(c) the sheet is fixed to the vehicle in strict compliance with the conditions set forth in Article 1 (a) of Annex 2 to this Convention.

2.3.6.(b) **Subparagraph 6 (b) — Permanently-secured sheets**

Where one or more edges of the sheet are permanently attached to the body of the vehicle, the sheet shall be held in place by one strip of metal or other suitable material secured to the body of the vehicle by joining devices meeting the requirements of subparagraph (a) of Explanatory Note 2.2.1 (a) of this Annex.

2.3.9. **Paragraph 9 — Textile-cored steel fastening ropes**

For purposes of this paragraph, ropes comprising a textile core surrounded by six strands consisting solely of steel wire and completely covering the core will be allowed on condition that the ropes (without taking into account the transparent plastic sheath, if any) are not less than 3 mm in diameter.

2.3.11.(a) **Subparagraph 11 (a) — Sheet-tensioning flaps**

The sheets of many vehicles are provided on the outside with a horizontal flap pierced by eyelets running along the length of the side of the vehicle. Such flaps, known as tensioning flaps, are used to tauten the sheet by means of tensioning cords or similar devices. Such flaps have been used to conceal horizontal slits made in the sheets giving improper access to the goods carried in the vehicle. It is therefore recommended that the use of flaps of this type should not be allowed. The following devices may be used instead:

(a) tensioning flaps of similar design fixed on the inside of the sheet; or

(b) small individual flaps each pierced by one eyelet secured to the outside surface of the sheet and spaced at such distances as will permit an adequate tensioning of the sheet.

Alternatively, it may be possible in certain cases to avoid the use of tensioning flaps on sheets.

2.3.11.(c) **Subparagraph 11 (c) — Sheet thongs**

2.3.11. (c)—1. The following materials are regarded as suitable for making thongs:

(a) leather;

(b) non-tensile textile materials including plastic-covered or rubberized cloth, provided that such materials cannot after severance be welded or reconstituted without leaving obvious traces. Furthermore, the plastic material used to cover thongs shall be transparent and smooth-surfaced.

2.3.11. (c)—2. The device shown in Sketch No 3 appended to this Annex meets the requirements of the last part of Article 3 (11) of Annex 2. It also meets the requirements of Article 3 (6) of Annex 2.

3. ANNEX 3

3.0.17. **Approval procedure**

1. Annex 3 provides that the competent authorities of a Contracting Party may issue a certificate of approval in respect of a vehicle constructed within its territory and that no additional approval procedures shall be applied in respect of such a vehicle in the country where it is registered or, as the case may be, where the owner is resident.

2. These provisions are not intended to restrict the right of the competent authorities of the Contracting Party where the vehicle is registered or where the owner is resident to require the production of such a certificate of approval either at importation or subsequently for purposes connected with the registration or control of the vehicle or with similar legal requirements.

3.0.20. **Procedure for endorsement of the certificate of approval**

When an endorsement concerning defects is to be cancelled after the vehicle has been restored to a satisfactory state, it is sufficient to state, under item 11 provided for the purpose, 'defects rectified' followed by the name, signature and stamp of the competent authority concerned.

Sketch No 1

Example of hinge and customs sealing device on doors of vehicles having insulated load compartments

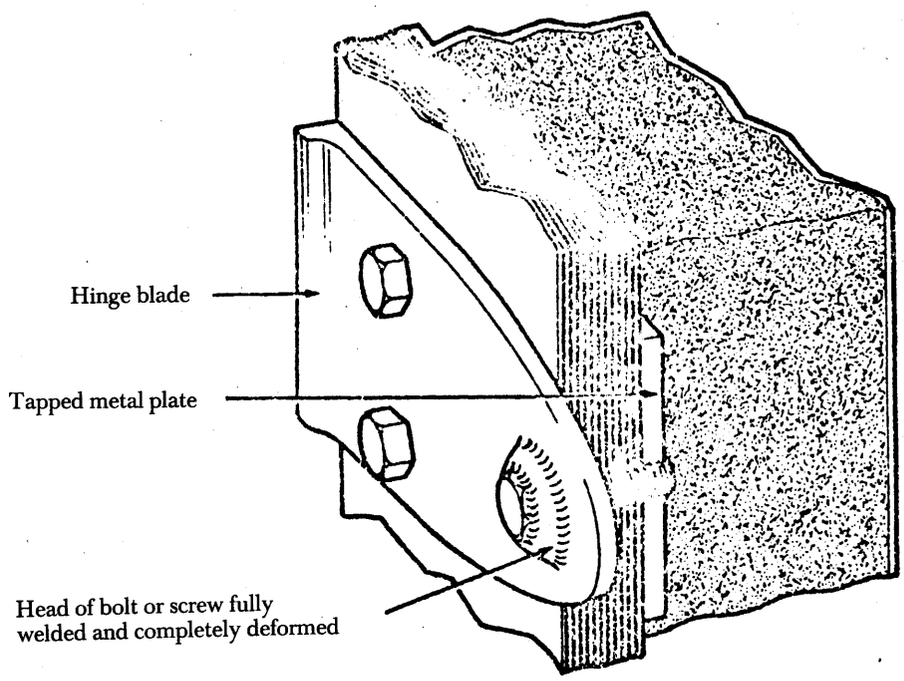

Hinge

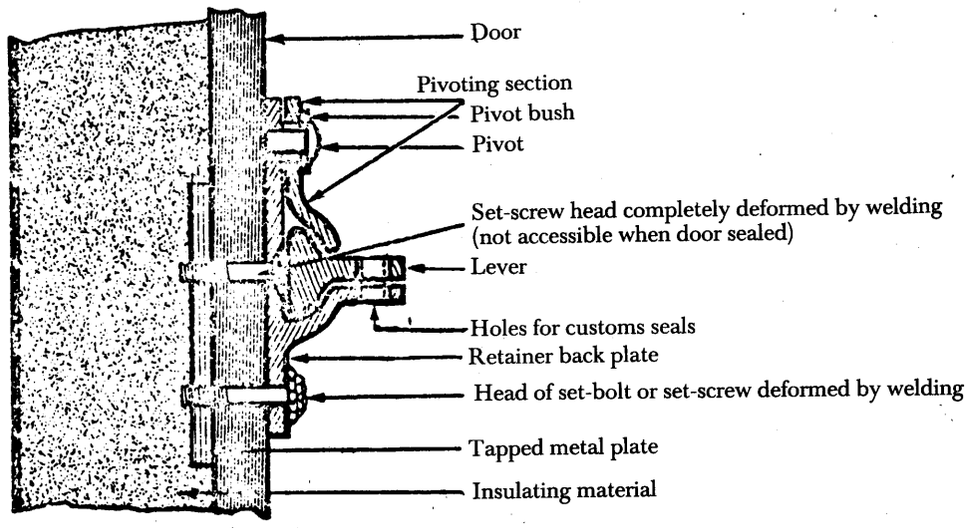

Customs sealing device

Sketch No 2

Sheeted vehicles with sliding rings

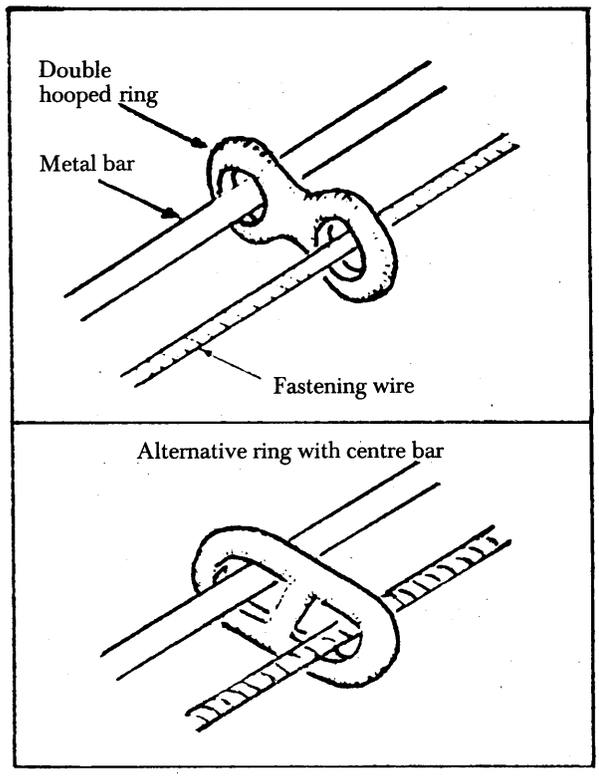

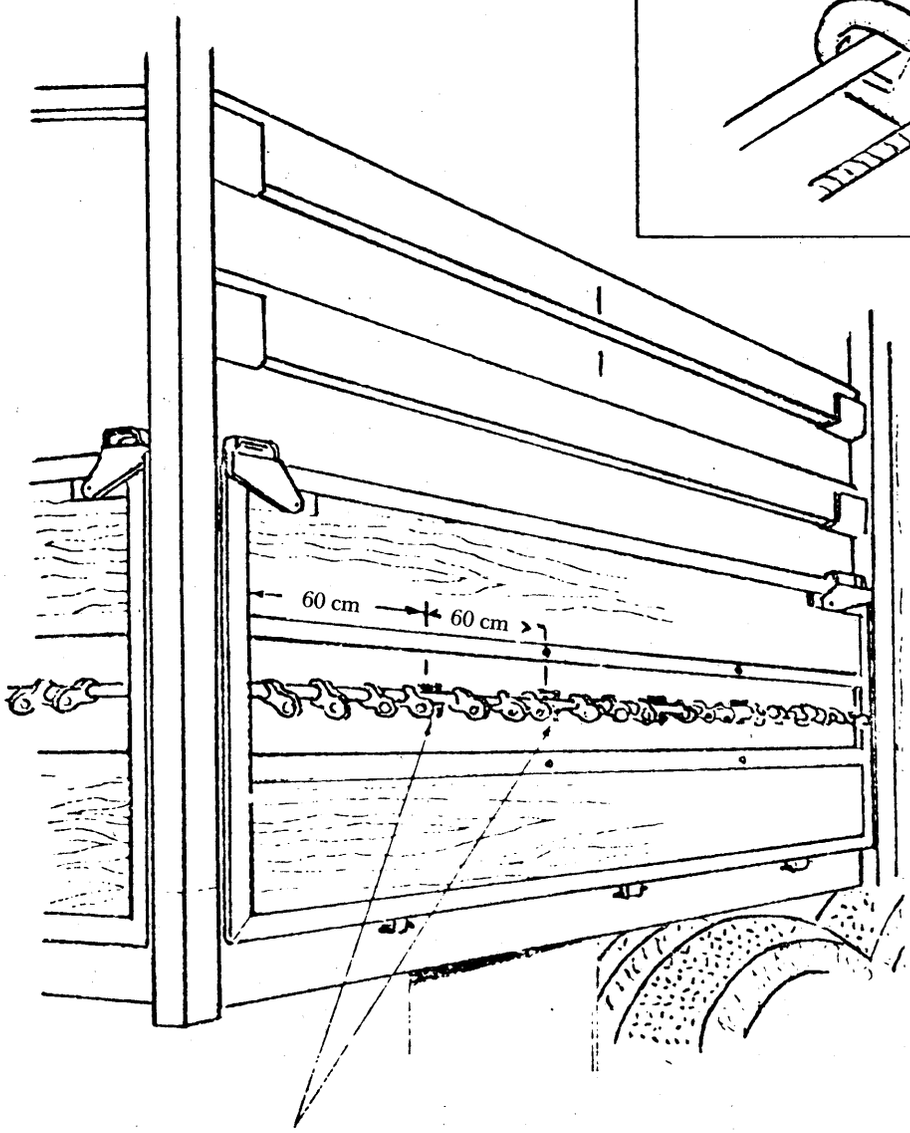

Sketch No 3

Example of a device for fastening vehicle sheets

The device illustrated below meets the requirements of the last part of Article 3 (11) of Annex 2. It also meets the requirements of Article 3 (6) of Annex 2.

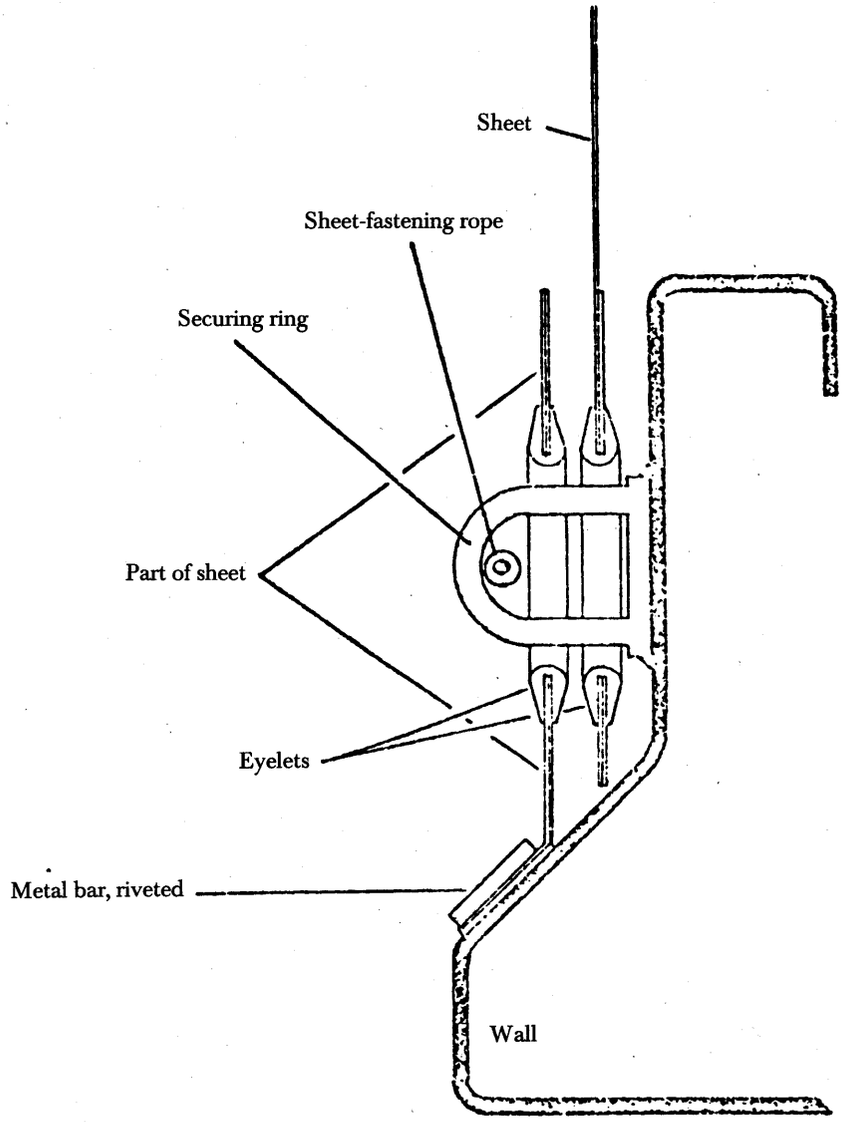

Sketch No 4

Device for fastening sheets

The device illustrated below meets the requirements of Article 3 (6) (a) of Annex 2.

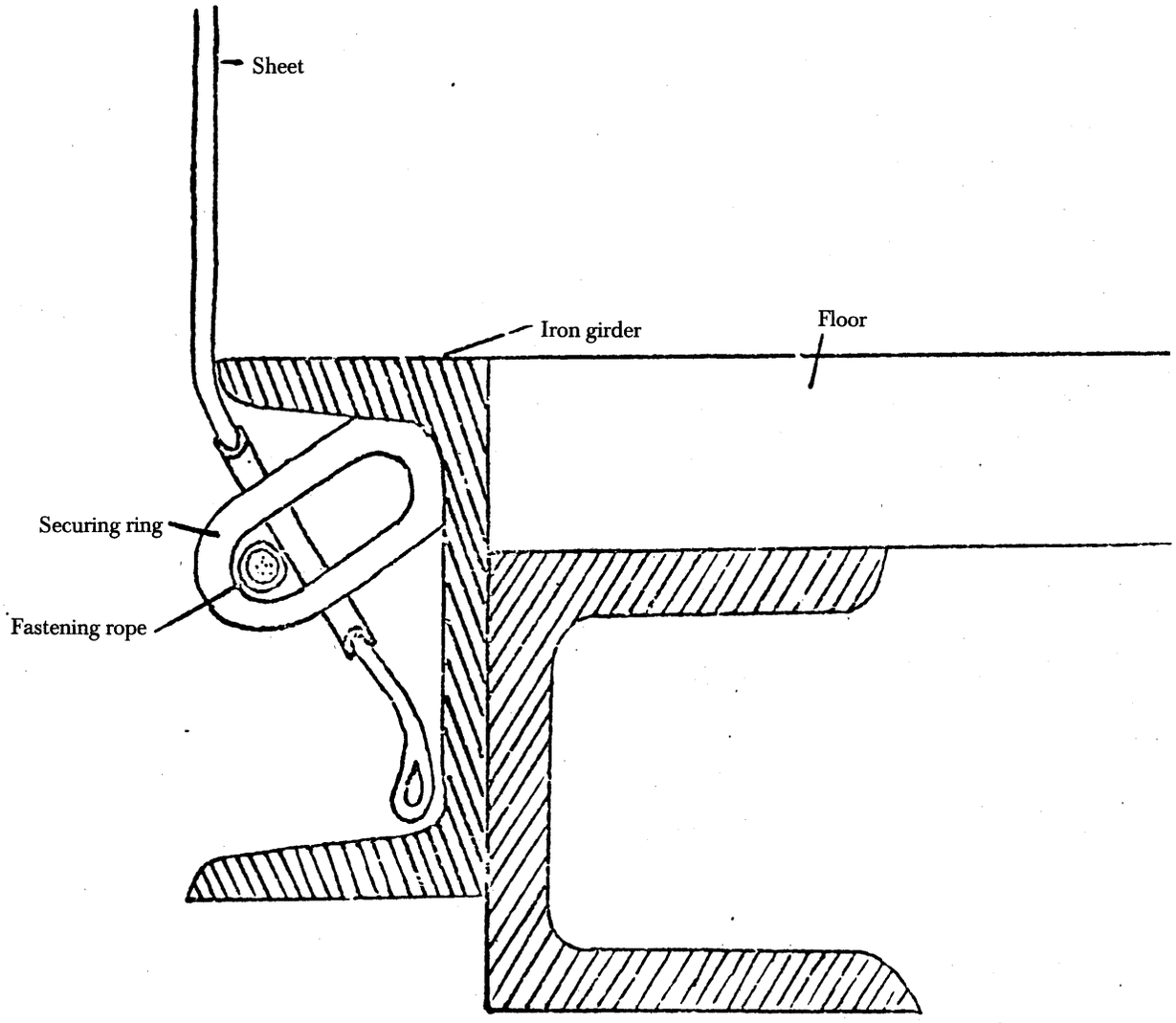

ANNEX 7

ANNEX REGARDING APPROVAL OF CONTAINERS

PART I

REGULATIONS ON TECHNICAL CONDITIONS APPLICABLE TO CONTAINERS WHICH MAY BE ACCEPTED FOR INTERNATIONAL TRANSPORT UNDER CUSTOMS SEAL

Article 1

Basic principles

Approval for the international transport of goods under customs seal may be granted only to containers constructed and equipped in such a manner that:

(a) no goods can be removed from, or introduced into, the sealed part of the container without leaving visible traces of tampering or without breaking the customs seal;

(b) customs seals can be simply and effectively affixed to them;

(c) they contain no concealed spaces where goods may be hidden;

(d) all spaces capable of holding goods are readily accessible for customs inspection.

Article 2

Structure of containers

1. To meet the requirements of Article 1 of these Regulations:

(a) the constituent parts of the container (sides, floor, doors, roof, uprights, frames, cross-pieces, etc.) shall be assembled either by means of devices which cannot be removed and replaced from the outside without leaving visible traces or by such methods as will produce a structure which cannot be modified without leaving visible traces. When the sides, floor, doors and roof are made up of various components, these shall meet the same requirements and be of sufficient strength;

(b) doors and all other closing systems (including stopcocks, manhole-covers, flanges, etc.) shall be fitted with a device on which customs seals can be fixed. This device must be such that it cannot be removed and replaced from outside the container without leaving visible traces, or the door or fastening be opened without breaking the customs seals. The latter shall be adequately protected. Opening roofs shall be permitted;

(c) apertures for ventilation and drainage shall be provided with a device preventing access to the interior of the container. This device must be such that it cannot be removed and replaced from outside the container without leaving visible traces.

2. Notwithstanding the provisions of Article 1 (c) of these Regulations, constituent parts of the container which, for practical reasons, have to include empty spaces (for example, between the partitions of a double wall) shall be permitted. In order that the said spaces cannot be used to conceal goods:

(i) it shall not be possible to remove and replace the lining inside the container without leaving visible traces, or

(ii) the number of the said spaces shall be kept to a minimum and these spaces shall be readily accessible for customs inspection.

Article 3

Containers capable of being folded or dismantled

Containers capable of being folded or dismantled shall be subject to the provisions of Articles 1 and 2 of these Regulations; in addition, they shall be fitted with a bolting system which locks the various parts together once the container has been erected. This bolting system must be capable of being sealed by the customs authorities if it is on the outside of the container when the latter has been erected.

Article 4

Sheeted containers

1. Where applicable, the provisions of Articles 1, 2 and 3 of these Regulations shall apply to sheeted containers. In addition, these containers shall conform to the provisions of this Article.

2. The sheet shall be either of strong canvas or of plastic-covered or rubberized cloth, which shall be of sufficient strength and unstretchable. It shall be in good condition and made up in such a way that once the closing device has been secured, it is impossible to gain access to the load without leaving visible traces.

3. If the sheet is made up of several pieces, their edges shall be folded into one another and sewn together with two seams at least 15 mm apart. These seams shall be made as shown in Sketch No 1 appended to these Regulations; however, where in the case of certain parts of the sheet (such as flaps at the rear and reinforced corners) it is not possible to assemble the pieces in that way, it shall be sufficient to fold the edge of the top section and make the seams as shown in Sketch No 2 appended to these Regulations. One of the seams shall be visible only from the inside and the colour of the thread used for that seam shall be clearly different from the colour of the sheet itself and from the colour of the thread used for the other seam. All seams shall be machine-sewn.

4. If the sheet is of plastic-covered cloth, and is made up of several pieces, the pieces may alternatively be welded together in the manner shown in Sketch No 3 appended to these Regulations. The edges of the pieces shall overlap by at least 15 mm. The pieces shall be fused together over the whole width of the overlap. The edge of the outer sheet shall be covered with a band of plastic material at least 7 mm wide, affixed by the same welding process. The plastic band and a width of at least 3 mm on each side shall have a well-marked uniform relief stamped on it. The pieces shall be welded in such a way that they cannot be separated and rejoined without leaving visible traces.

5. Repairs shall be made in accordance with the method described in Sketch No 4 appended to these Regulations; the edges shall be folded into one another and sewn together with two visible seams at least 15 mm apart; the colour of the thread visible from the inside shall be different from that of the thread visible from the outside and from that of the sheet itself; all seams shall be machine-sewn. When a sheet which has been damaged near the edges is repaired by replacing the damaged part by a patch, the seam can also be made in accordance with the provisions of paragraph 3 of this Article and Sketch No 1 appended to these Regulations. Sheets of plastic-covered cloth may alternatively be repaired in accordance with the method described in paragraph 4 of this Article, but in that case the weld must be made on both sides of the sheet, the patch being fitted on the inside of the sheet.

6. (a) The sheet shall be fixed to the container in strict compliance with the conditions set forth in Article 1 (a) and (b) of these Regulations. The following types of fastening shall be provided:

(i) metal rings fixed to the container,

(ii) eyelets in the edge of the sheet,

(iii) a fastening passing through the rings above the sheet and visible from the outside for its entire length.

The sheet shall overlap solid parts of the container by at least 250 mm, measured from the centre of the securing rings, unless the system of construction of the container by itself prevents all access to the goods.

(b) When the edge of a sheet is to be permanently secured to a container, the joint shall be continuous and effected by means of solid devices.

7. The interval between rings and between eyelets shall not exceed 200 mm. The eyelets shall be reinforced.

8. The following fastenings shall be used:

(a) steel wire rope of at least 3 mm diameter; or

(b) a rope of hemp or sisal of at least 8 mm diameter encased in a transparent unstretchable plastic sheath.

Wire ropes may have a transparent unstretchable plastic sheath.

9. Each rope shall be in one piece and have a hard metal end-piece at each end. The fastener of each metal end-piece shall include a hollow rivet passing through the rope so as to allow the introduction of the thread or the strap of the customs seal. The rope shall remain visible on either side of the hollow rivet so that it is possible to ensure that the rope is in one piece (see Sketch No 5 appended to these Regulations).

10. At the openings in the sheet, used for loading and unloading, the two edges of the sheet shall have an adequate overlap. They shall also be fastened by:

(a) a flap sewn or welded in accordance with paragraphs 3 and 4 of this Article;

(b) rings and eyelets meeting the conditions of paragraph 7 of this Article; and

(c) a thong made of appropriate material, in one piece and unstretchable, at least 20 mm wide and 3 mm thick, passing through the rings and holding together the two edges of the sheet and the flap; the thong shall be secured inside the sheet and fitted with an eyelet to take the rope mentioned in paragraph 8 of this Article.

A flap shall not be required if a special device, such as a baffle plate, is fitted, which prevents access to the goods without leaving visible traces.

11. The identification marks, which must appear on the container, and the approval plate provided for in Part II of this Annex, shall in no circumstances be covered by the sheet.

Article 5

Transitional provisions

Until 1 January 1977, end-pieces shall be allowed which conform to Sketch No 5 appended to these Regulations, even if they include hollow rivets of a type previously accepted with holes of dimensions less than those given in the sketch.

Sketch No 1

Sheets made of several pieces (sewn together by means of seams)

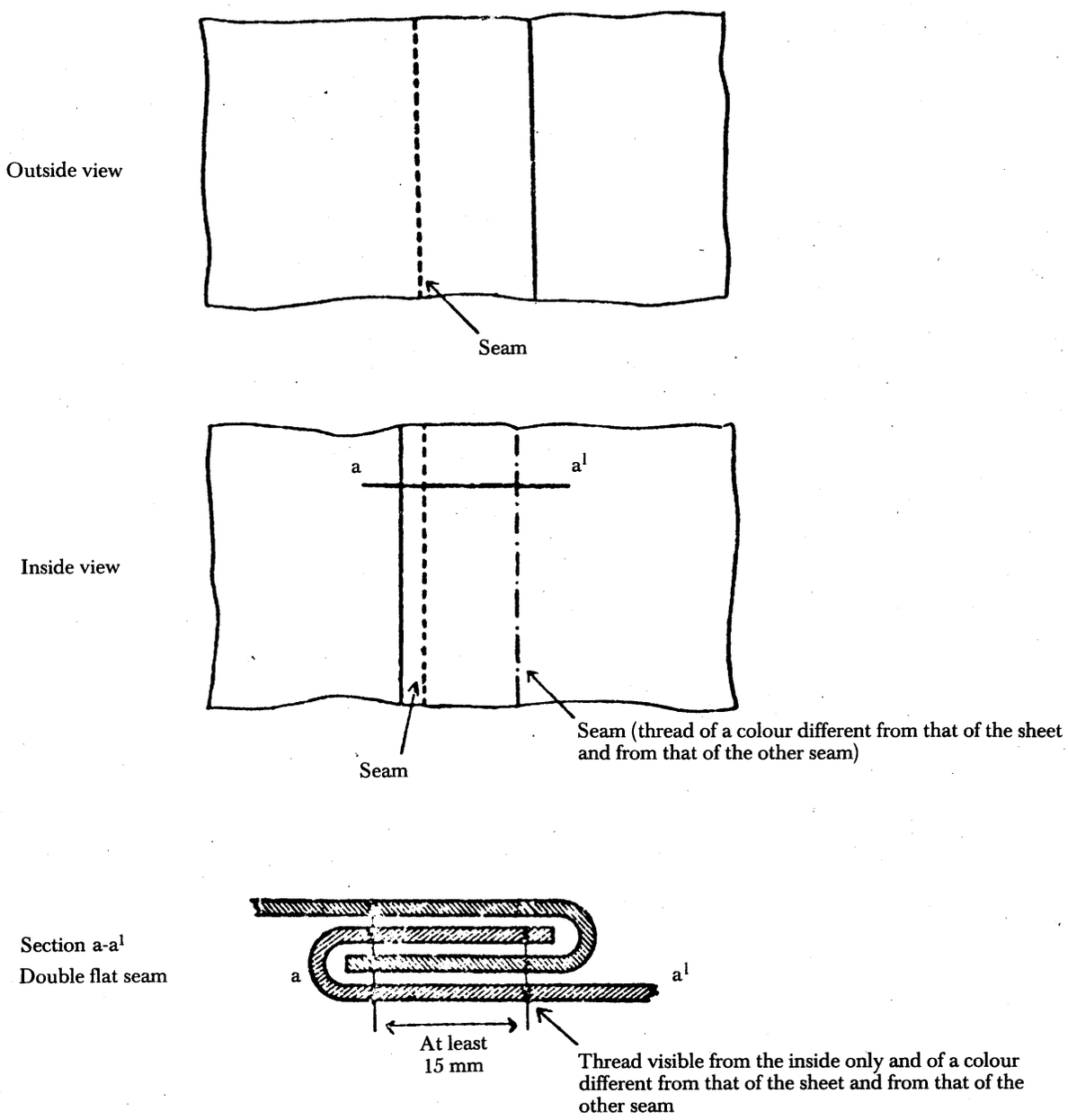

Sketch No 2

Sheets made of several pieces

Outside view

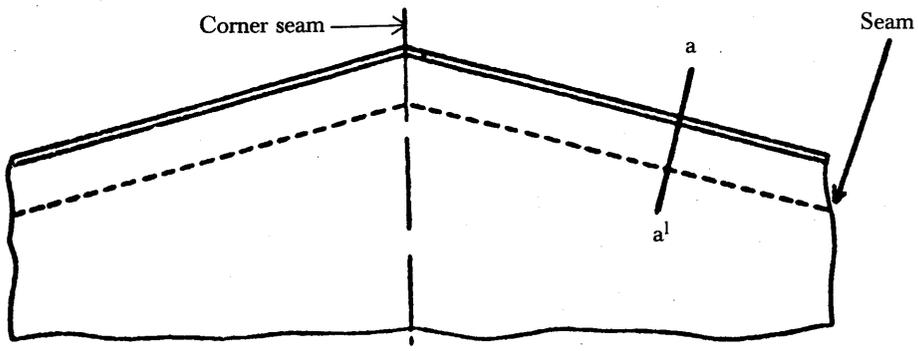

Inside view

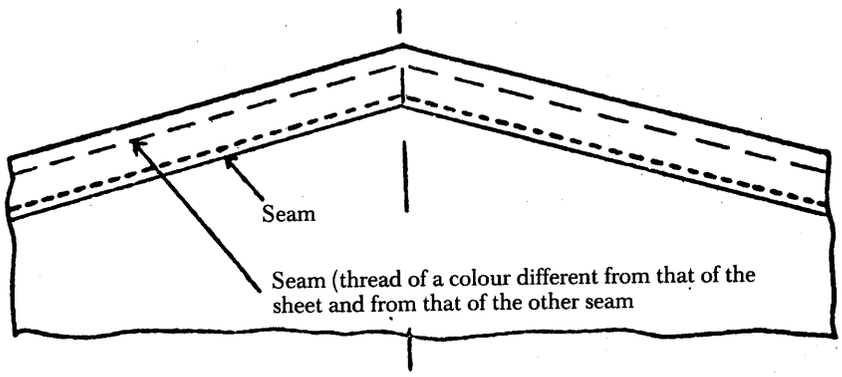

Section a-a¹

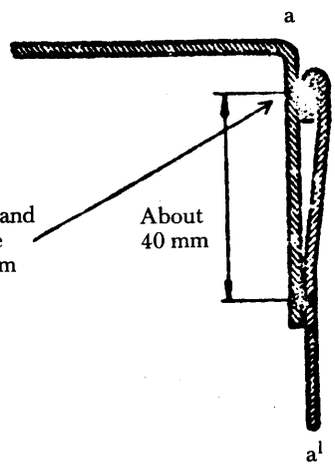

Note: The corner seams made according to the method illustrated in Sketch No 2 (a) in Annex 2 to this Convention are also allowed.

Sketch No 3

Sheets made of several pieces (welded together)

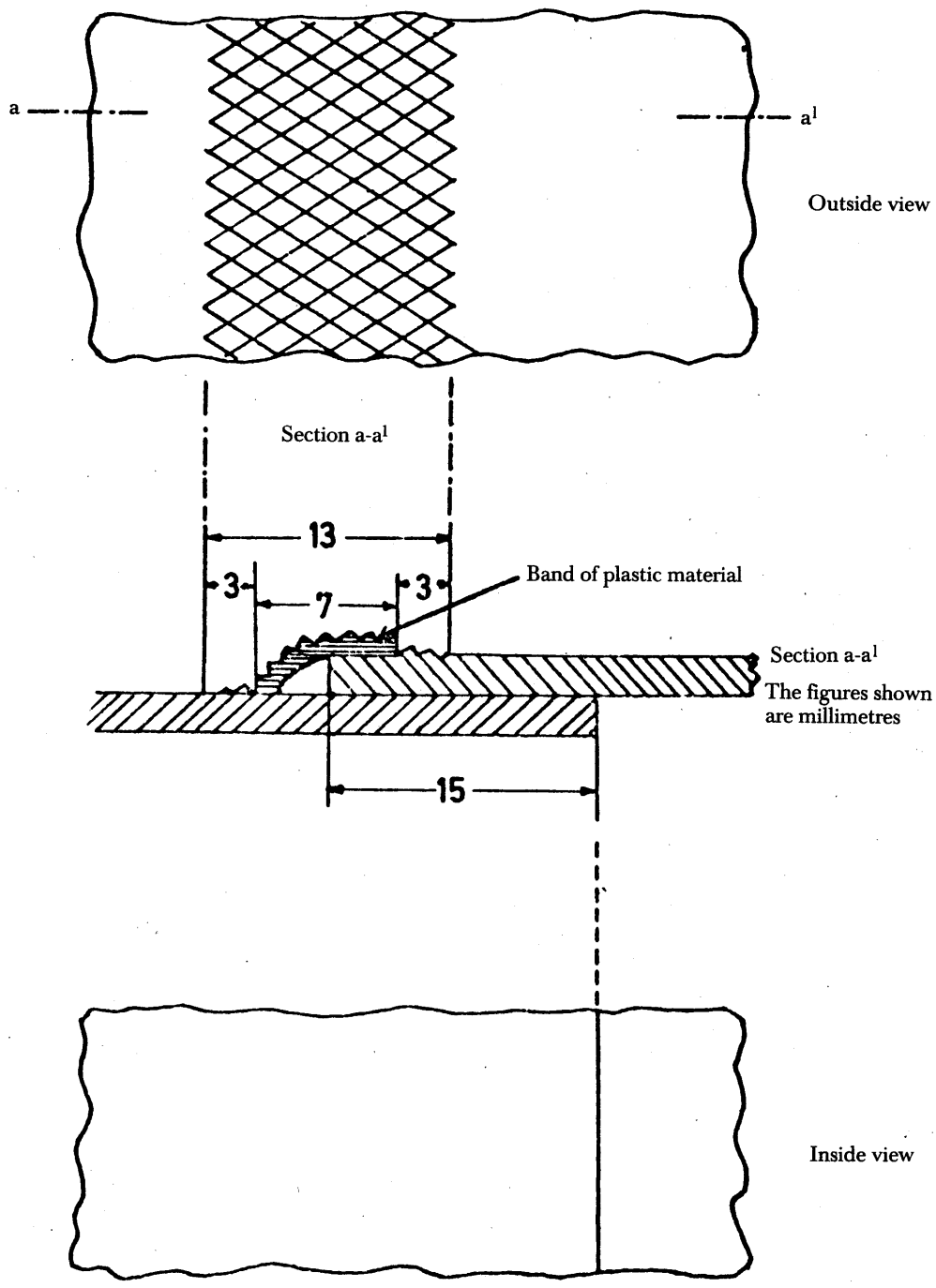

Sketch No 4

Repair of the sheet

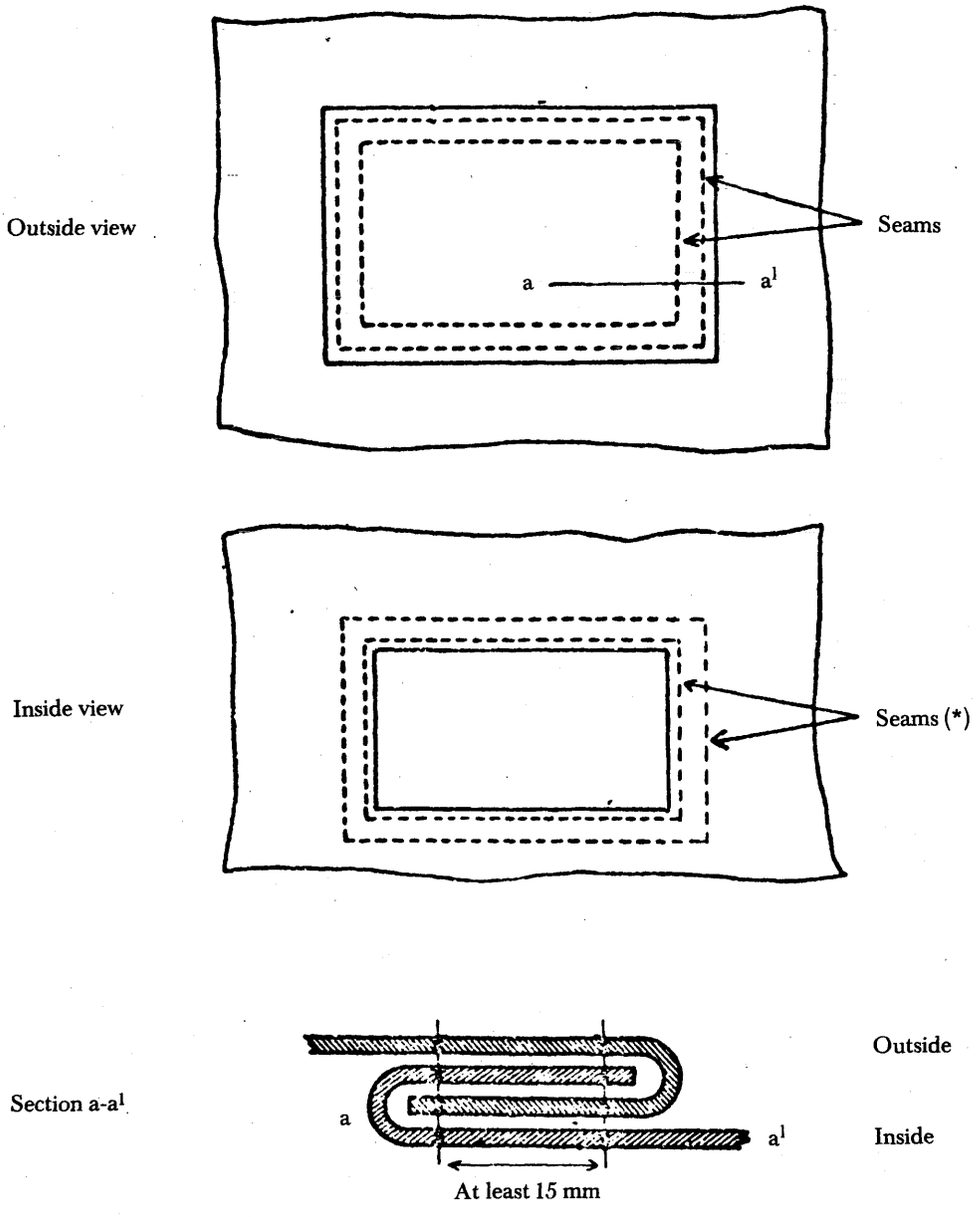

(*) Threads visible from the inside shall be of a colour different from that of the threads visible from the outside and from that of the sheet.

Sketch No 5

Specimen of end-piece

1. **Side view:** Front

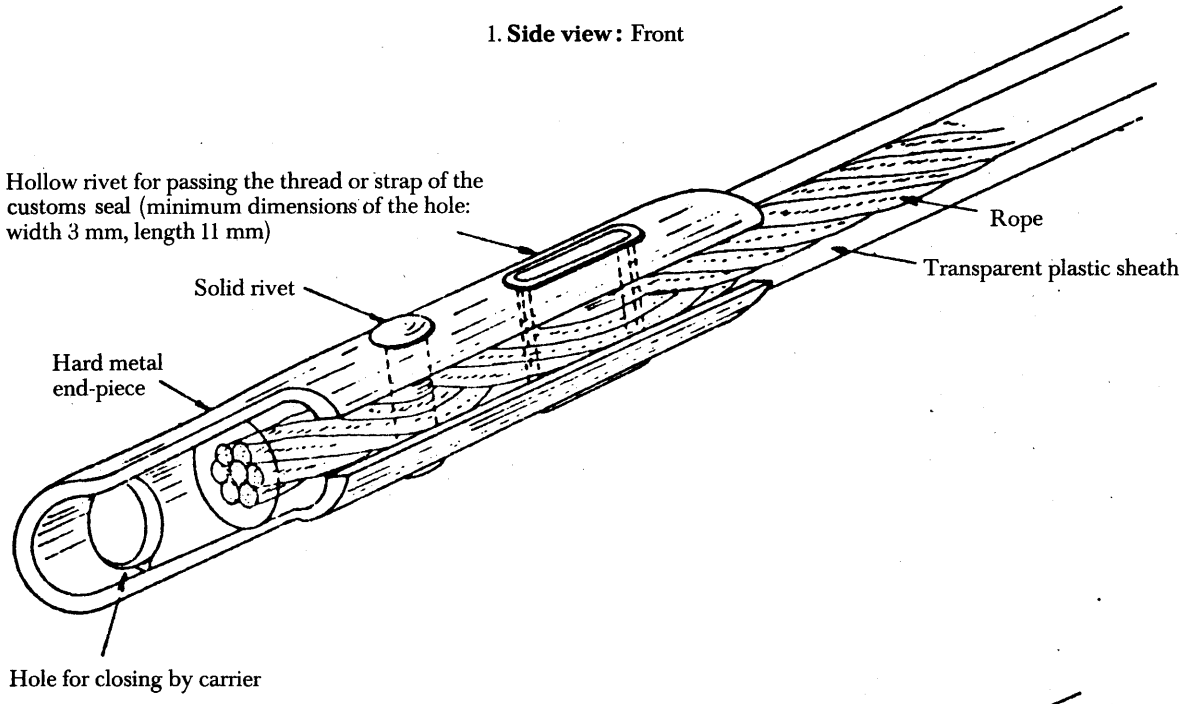

2. **Side view:** Back

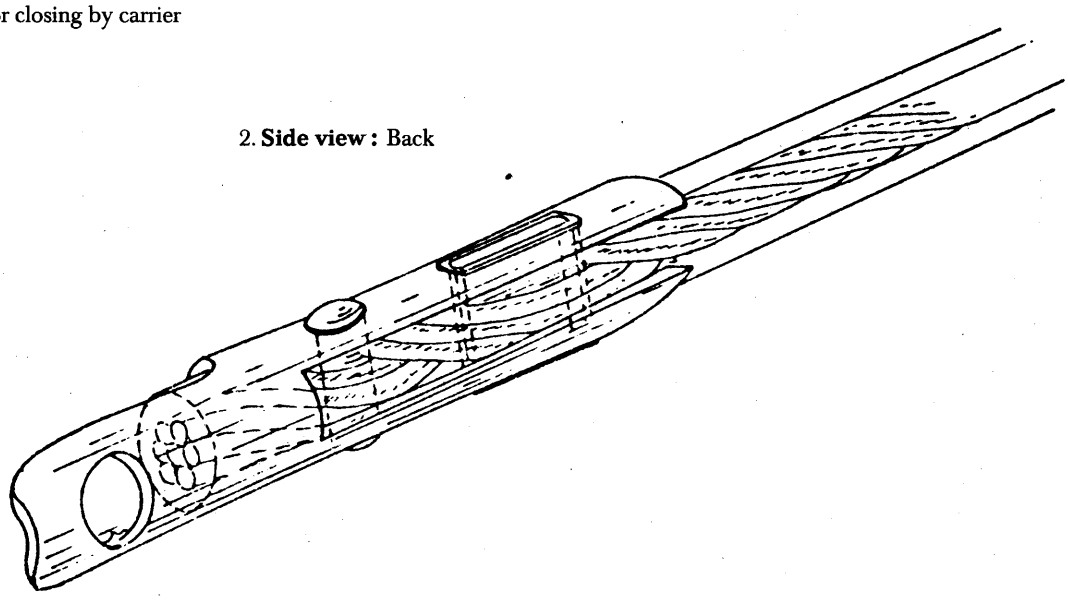

PART II

PROCEDURES FOR THE APPROVAL OF CONTAINERS COMPLYING WITH THE TECHNICAL CONDITIONS PRESCRIBED IN PART I

General

1. Containers may be approved for the transport of goods under customs seal either:

(a) at the manufacturing stage, by design type (procedure for approval at the manufacturing stage); or

(b) at a stage subsequent to manufacture, either individually or in respect of a specified number of containers of the same type (procedure for approval at a stage subsequent to manufacture).

Provisions common to both approval procedures

2. The competent authority responsible for granting approval shall issue to the applicant, after approval, a certificate of approval valid, as the case may be, either for an unlimited series of containers of the approved type or for a specified number of containers.

3. The beneficiary of approval shall affix an approval plate to the approved container or containers before their use for the transport of goods under customs seal.

4. The approval plate shall be affixed permanently and in a clearly visible place adjacent to any other approval plate issued for official purposes.

5. The approval plate, conforming to Model I reproduced in Appendix 1 hereto, shall take the form of a metal plate measuring not less than 20 × 10 cm. The following particulars shall be stamped into or embossed on the plate or indicated on its surface in any other permanent and legible way, in at least the English or the French language:

(a) the words 'Approved for transport under customs seal';

(b) an indication of the country in which approval was granted either by name or by means of the distinguishing sign used to indicate the country of registration of motor vehicles in international road traffic, and the number (figures, letters, etc.) of the certificate of approval and the year (e.g. 'NL/26/73' means 'Netherlands, certificate of approval No 26, issued in 1973');

(c) the serial number assigned to the container by the manufacturer (manufacturer's number);

(d) if the container has been approved by type, the identification numbers or letters of the type of container.

6. If a container no longer complies with the technical conditions prescribed for its approval, it shall, before it can be used for the transport of goods under customs seal, be restored to the condition which had justified its approval, so as to comply again with the said technical conditions.

7. If the essential characteristics of a container are changed, the container shall cease to be covered by the approval and shall be reapproved by the competent authority before it can be used for the transport of goods under customs seal.

Special provisions for approval by design type at the manufacturing stage

8. Where the containers are manufactured by type series, the manufacturer may apply to the competent authority of the country of manufacture for approval by design type.

9. The manufacturer shall state in his application the identification numbers or letters which he assigns to the type of container to which his application for approval relates.

10. The application shall be accompanied by drawings and a detailed design specification of the container type to be approved.

11. The manufacturer shall give an undertaking in writing that he will:

(a) produce to the competent authority such containers of the type concerned as that authority may wish to examine;

(b) permit the competent authority to examine further units at any time during the production of the type series concerned;

(c) advise the competent authority of any change, of whatever magnitude, in the design or specification before proceeding with such change;

(d) mark the containers in a visible place with, in addition to the markings required on the approval plate, the identification numbers or letters of the design

type and the serial number of the container in the type series (manufacturer's number);

(e) keep a record of containers manufactured to the approved design type.

12. The competent authority shall state what changes, if any, must be made to the proposed design type so that approval may be granted.

13. No type-approval by design type shall be granted unless the competent authority has satisfied itself by examination of one or more containers manufactured to the design type concerned that containers of that type comply with the technical conditions prescribed in Part I.

14. When a container type is approved there shall be issued to the applicant a single certificate of approval conforming to Model II reproduced in Appendix 2 hereto and valid for all containers manufactured in conformity with the specifications of the type so approved. Such certificate shall entitle the manufacturer to affix to every container of the type series an approval plate in the form prescribed in paragraph 5.

Special provisions for approval at a stage subsequent to manufacture

15. If approval has not been applied for at the manufacturing stage, the owner, the operator, or the representative of either, may apply for approval to the competent authority to which he is able to produce the container or containers and for which he seeks approval.

16. An application for approval submitted under paragraph 15 shall state the serial number (manufacturer's number) placed on each container by the manufacturer.

17. When the competent authority has ascertained that the container or containers comply with the technical conditions prescribed in Part I, by examination of as many containers as it considers necessary, it shall issue a certificate of approval conforming to Model III reproduced in Appendix 3 hereto and valid solely for the number of containers approved. Such certificate, which shall bear the manufacturer's serial number or numbers assigned to the container or containers to which it relates, shall entitle the applicant to affix to each container so approved the approval plate prescribed in paragraph 5.

APPENDIX 1 TO PART II

MODEL I

APPROVAL PLATE
(English version)

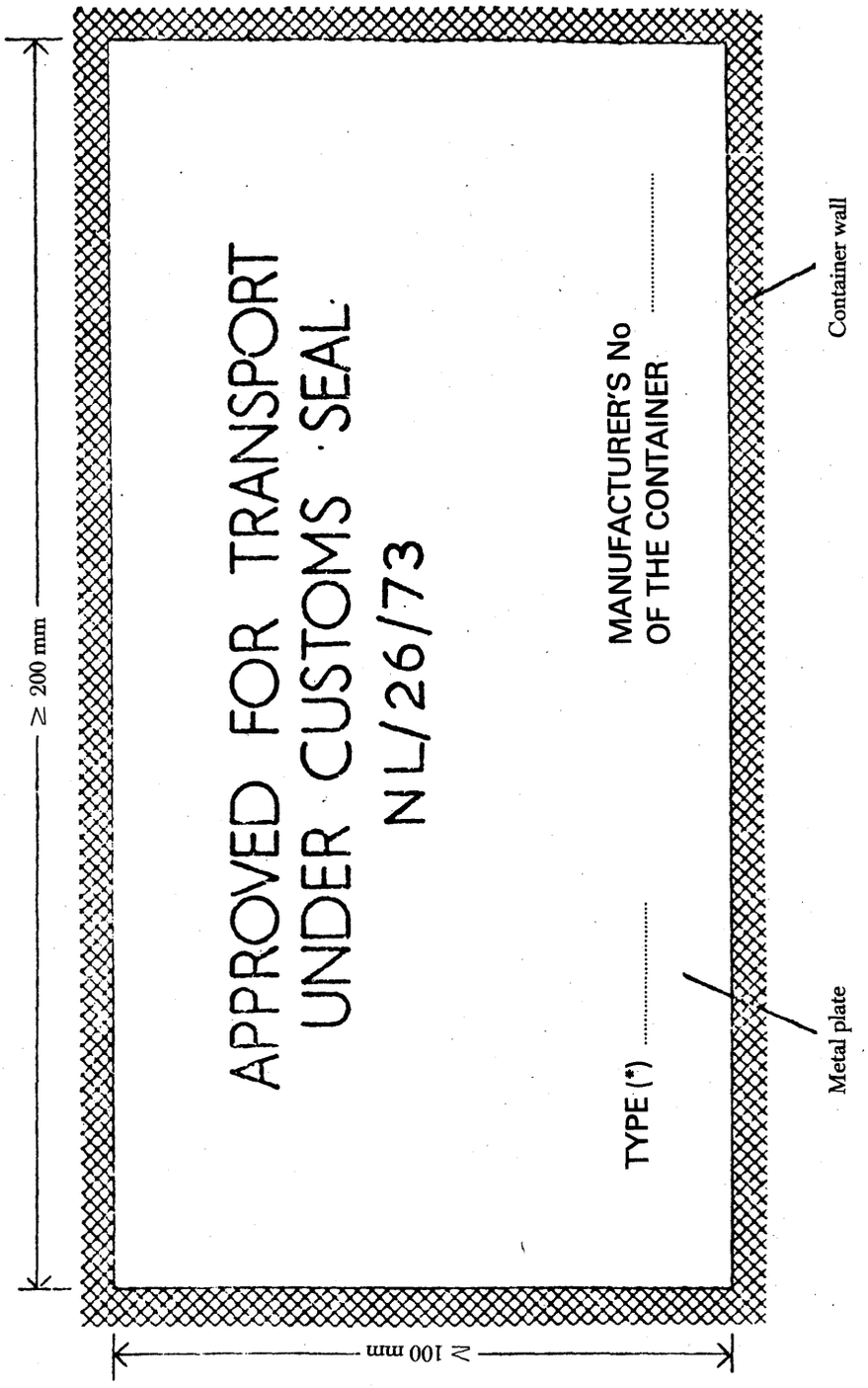

(*) Only in case of approval by design type.

APPENDIX 1 TO PART II

MODEL I

APPROVAL PLATE
(French version)

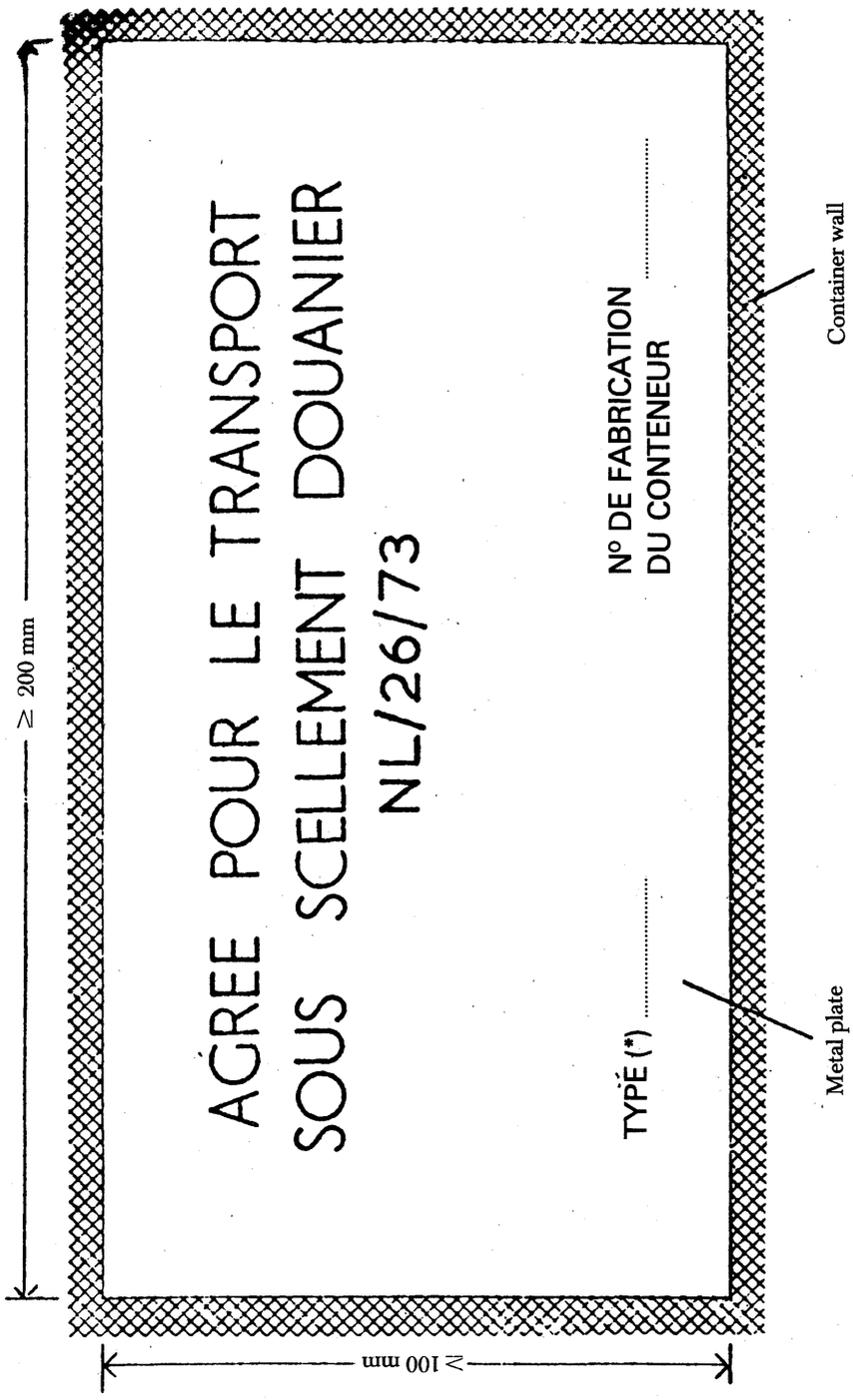

(*) Only in case of approval by design type.

APPENDIX 2 TO PART II

MODEL II

CUSTOMS CONVENTION ON THE INTERNATIONAL TRANSPORT OF GOODS UNDER COVER OF TIR CARNETS (1975)

CERTIFICATE OF APPROVAL BY DESIGN TYPE

1. Certificate No (*) .....
2. This is to certify that the container design type described below has been approved and that containers manufactured to this type can be accepted for the transport of goods under customs seal.
3. Kind of container .....
4. Identification number or letters of the design type .....
5. Identification number of the working drawings .....
6. Identification number of the design specifications .....
7. Tare weight .....
8. External dimensions (in cm) .....
9. Essential characteristics of structure (nature of materials, kind of construction, etc.) .....

   .....
10. This certificate is valid for all containers manufactured in conformity with the drawings and specifications referred to above.
11. Issued to .....,
    (Manufacturer's name and address)

    who is authorized to affix an approval plate to each container of the approved design type manufactured by him,

    at ..... on ..... 19.....
    (Place) (Date)

    by .....
    (Signature and stamp of issuing service or organization)

IMPORTANT NOTICE

(Paragraphs 6 and 7 of Part II of Annex 7 to the Customs Convention on the international transport of goods under cover of TIR carnets, 1975)

6. If a container no longer complies with the technical conditions prescribed for its approval, it shall, before it can be used for the transport of goods under customs seal, be restored to the condition which had justified its approval, so as to comply again with the said technical conditions.

7. If the essential characteristics of a container are changed, the container shall cease to be covered by the approval and shall be reapproved by the competent authority before it can be used for the transport of goods under customs seal.

(*) Insert the letters and figures, which are to be marked on the approval plate (see paragraph 5 (b) of Part II of Annex 7 to the Customs Convention on the international transport of goods under cover of TIR carnets, 1975).

APPENDIX 3 TO PART II

MODEL III

CUSTOMS CONVENTION ON THE INTERNATIONAL TRANSPORT OF GOODS UNDER COVER OF TIR CARNETS (1975)

CERTIFICATE OF APPROVAL GRANTED AT A STAGE SUBSEQUENT TO MANUFACTURE

1. Certificate No (*) .....
2. This is to certify that the container (containers) specified below has (have) been approved for the transport of goods under customs seal.
3. Kind of container(s) .....
4. Serial number(s) assigned to the container(s) by the manufacturer .....

   .....
5. Tare weight .....
6. External dimensions (in cm) .....
7. Essential characteristics of structure (nature of materials, kind of construction, etc.) .....

   .....
8. Issued to .....
   (Applicant's name and address)

   who is authorized to affix an approval plate to the abovementioned container(s),

   at ..... on ..... 19 .....
   (Place) (Date)

   by .....
   (Signature and stamp of issuing service or organization)

IMPORTANT NOTICE

(Paragraphs 6 and 7 of Part II of Annex 7 to the Customs Convention on the international transport of goods under cover of TIR carnets, 1975)

6. If a container no longer complies with the technical conditions prescribed for its approval, it shall, before it can be used for the transport of goods under customs seal, be restored to the condition which had justified its approval, so as to comply again with the said technical conditions.

7. If the essential characteristics of a container are changed, the container shall cease to be covered by the approval and shall be reapproved by the competent authority before it can be used for the transport of goods under customs seal.

(*) Insert the letters and figures, which are to be marked on the approval plate (see paragraph 5 (b) of Part II of Annex 7 to the Customs Convention on the international transport of goods under cover of TIR carnets, 1975)

PART III

EXPLANATORY NOTES

1. The Explanatory Notes to Annex 2 set out in Annex 6 to this Convention apply *mutatis mutandis* to containers approved for transport under customs seal for the application of this Convention.

2. **Part I — Article 4 (6) (a)**

   Example of a system of affixing sheets around containers' corner-castings, acceptable from a customs point of view, is given in the sketch appended hereto.

3. **Part II — paragraph 5**

   If two sheeted containers, approved for transport under customs seal have been joined together in such a way that they form one container, covered by a single sheet and fulfilling the conditions for transport under customs seal, a separate certificate of approval, or approval plate, shall not be required for the combination.

Device for affixing sheets around containers' corner castings

The device illustrated below meets the requirements of Article 4 (6) (a) of Part I:

Application at corner posts

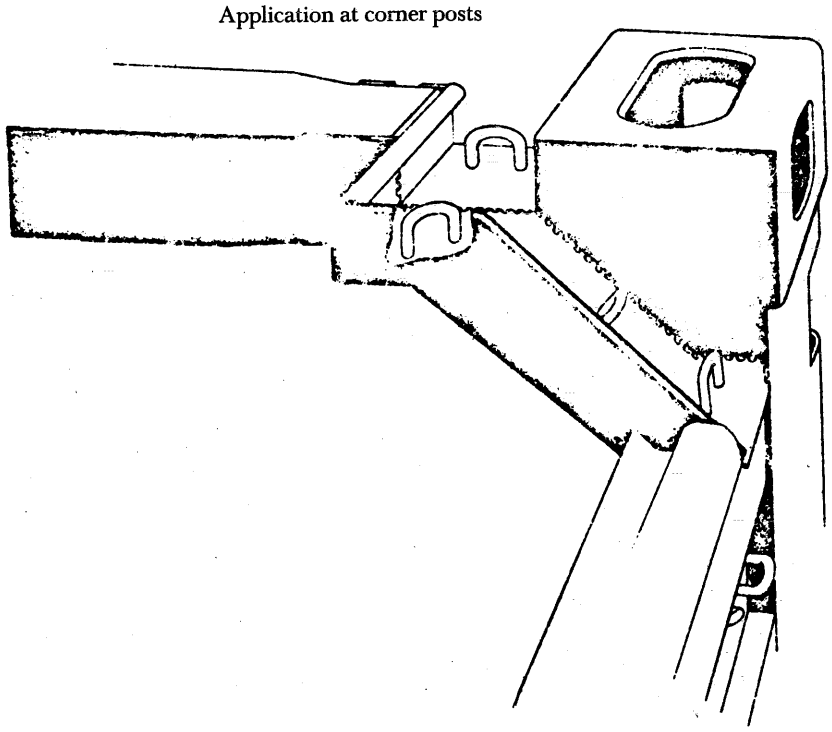

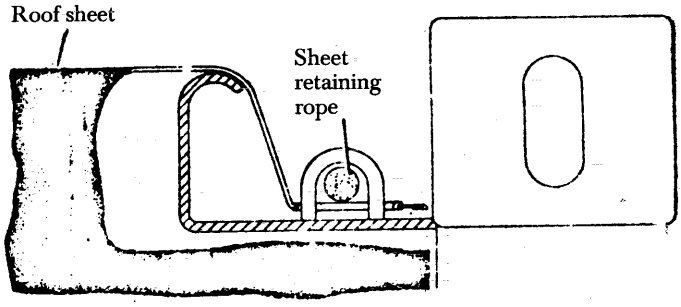

Sectional view