This text is meant purely as a documentation tool and has no legal effect. The Union's institutions do not assume any liability for its contents. The authentic versions of the relevant acts, including their preambles, are those published in the Official Journal of the European Union and available in EUR-Lex. Those official texts are directly accessible through the links embedded in this document

►B DIRECTIVE 2000/14/EC OF THE EUROPEAN PARLIAMENT AND OF THE COUNCIL

of 8 May 2000

on the approximation of the laws of the Member States relating to the noise emission in the environment by equipment for use outdoors

(OJ L 162, 3.7.2000, p. 1)

Amended by:

		Official Journal		
		No	page	date
►M1	Directive 2005/88/EC of the European Parliament and of the Council of 14 December 2005	L 344	44	27.12.2005
►M2	Regulation (EC) No 219/2009 of the European Parliament and of the Council of 11 March 2009	L 87	109	31.3.2009
►M3	Regulation (EU) 2019/1243 of the European Parliament and of the Council of 20 June 2019	L 198	241	25.7.2019
►M4	Commission Delegated Regulation (EU) 2024/1208 of 16 November 2023	L 1208	1	2.5.2024
►M5	Directive (EU) 2024/2839 of the European Parliament and of the Council of 23 October 2024	L 2839	1	7.11.2024

Corrected by:

►C1 Corrigendum, OJ L 165, 17.6.2006, p. 35 (2005/88/EC)

►C2 Corrigendum, OJ L 90290, 8.5.2024, p. 1 (2024/1208)

▼B

DIRECTIVE 2000/14/EC OF THE EUROPEAN PARLIAMENT AND OF THE COUNCIL

of 8 May 2000

on the approximation of the laws of the Member States relating to the noise emission in the environment by equipment for use outdoors

Article 1

Objectives

The aim of this Directive is to harmonise the laws of the Member States relating to noise emission standards, conformity assessment procedures, marking, technical documentation and collection of data concerning the noise emission in the environment of equipment for use outdoors. It will contribute to the smooth functioning of the internal market, while protecting human health and well-being.

Article 2

Scope

1. This Directive applies to equipment for use outdoors listed in Articles 12 and 13 and defined in Annex I. This Directive only covers equipment that is placed on the market or put into service as an entire unit suitable for the intended use. Non-powered attachments that are separately placed on the market or put into service shall be excluded, except for hand-held concrete-breakers and picks and for hydraulic hammers.

2. The following shall be excluded from the scope of this Directive:

— all equipment primarily intended for the transport of goods or persons by road or rail or by air or on waterways,

— equipment specially designed and constructed for military and police purposes and for emergency services.

Article 3

Definitions

For the purpose of this Directive the following definitions shall apply:

(a) ‘equipment for use outdoors’ means all machinery defined in Article 1(2) of Directive 98/37/EC of the European Parliament and of the Council of 22 June 1998 on the approximation of the laws of the Member States relating to machinery ([1]) which is either self-propelled or can be moved and which, irrespective of the driving element(s), is intended to be used, according to its type, in the open air and which contributes to environmental noise exposure. The use of equipment in an ambience where the transmission of sound is not or not significantly affected (for instance

([1]) OJ L 207, 23.7.1998, p. 1. Directive as amended by Directive 98/79/EC (OJ L 331, 7.12.1998, p. 1).

▼B

under tents, under roofs for protection against rain or in the shell of houses) is regarded as use in the open air. It also means non-powered equipment for industrial or environmental applications which is intended, according to its type, to be used outdoors and which contributes to environmental noise exposure. All these types of equipment are hereinafter referred to as 'equipment';

(b) 'conformity assessment procedures' means the procedures laid down in Annexes V to VIII, based on Decision 93/465/EEC;

(c) 'marking' means the visibly, legibly and indelibly affixing on the equipment of the CE marking defined in Decision 93/465/EEC accompanied by the indication of the guaranteed sound power level;

(d) 'sound power level L_{WA}' means the A-weighted sound power in dB in relation to 1 pW as defined in EN ISO 3744:1995 and EN ISO 3746:1995;

(e) 'measured sound power level' means a sound power level as determined from measurements as laid down in Annex III; measured values may be determined either from a single machine representative for the type of equipment or from the average of a number of machines;

(f) 'guaranteed sound power level' means a sound power level determined in accordance with the requirements laid down in Annex III which includes the uncertainties due to production variation and measurement procedures and where the manufacturer, or his authorised representative established in the Community, confirms that according to the technical instruments applied and referred to in the technical documentation it is not exceeded.

Article 4

Placing on the market

1. Equipment referred to in Article 2(1) shall not be placed on the market or put into service until the manufacturer, or his authorised representative established in the Community, ensures that:

— the equipment satisfies the requirements concerning the noise emission in the environment of this Directive,

— the conformity assessment procedures referred to in Article 14 have been completed,

— the equipment bears CE marking and the indication of the guaranteed sound power level and is accompanied by an EC declaration of conformity.

2. Where neither the manufacturer nor his authorised representative is established in the Community, the obligations of this Directive shall apply to any person placing the equipment on the market or putting it into service in the Community.

Article 5

Market surveillance

1. Member States shall take appropriate measures to ensure that equipment referred to in Article 2(1) may be placed on the market or put into service only if it conforms to the provisions of this Directive, bears the CE marking and the indication of the guaranteed sound power level and is accompanied by an EC declaration of conformity.

▼B

2. The competent authorities of the Member States shall assist each other in fulfilment of their obligations to carry out market surveillance.

Article 6

Free movement

1. Member States shall not prohibit, restrict or impede the placing on the market or putting into service in their territory of equipment referred to in Article 2(1) which complies with the provisions of this Directive, bears the CE marking and the indication of the guaranteed sound power level and is accompanied by an EC declaration of conformity.

2. At trade fairs, exhibitions, demonstrations, and similar events, Member States shall not prevent the showing of equipment referred to in Article 2(1) which does not conform to the provisions of this Directive, provided that a visible sign clearly indicates that such equipment does not conform and that it is not placed on the market or put into service until it has been brought into conformity by the manufacturer or his authorised representative established in the Community. During demonstrations adequate safety measures shall be taken to ensure the protection of persons.

Article 7

Presumption of conformity

Member States shall presume that equipment referred to in Article 2(1) bearing the CE marking and the indication of the guaranteed sound power level and which is accompanied by the EC declaration of conformity conforms to all the provisions of this Directive.

Article 8

EC Declaration of conformity

1. The manufacturer, or his authorised representative established in the Community, of equipment referred to in Article 2(1) shall, in order to certify that an item of equipment is in conformity with the provisions of this Directive, draw up an EC declaration of conformity for each type of equipment manufactured; the minimum content of this declaration of conformity is laid down in Annex II.

2. A Member State may require that the declaration of conformity be drawn up in or translated into the official Community language or languages determined by the Member State when equipment is placed on the market or put into service in its territory.

3. The manufacturer, or his authorised representative established in the Community, of equipment referred to in Article 2(1) shall keep a specimen of the EC declaration of conformity for 10 years from the date on which the equipment was last manufactured, together with the technical documentation as provided for in Annex V point 3, Annex VI point 3, Annex VII point 2, Annex VIII points 3.1 and 3.3.

Article 9

Non-compliance of equipment

1. Where a Member State ascertains that equipment referred to in Article 2(1) which is placed on the market or put into service does not comply with the requirements of this Directive, it shall take all appropriate

▼B

measures so that the manufacturer or his authorised representative established in the Community shall bring the equipment into conformity with the provisions of this Directive.

2. Where

(a) the limit values referred to in Article 12 are exceeded; or

(b) non-compliance with other provisions of this Directive continues despite measures taken under paragraph 1;

the Member State concerned shall take all appropriate measures to restrict or prohibit the placing on the market or putting into service of the equipment in question or to ensure that it is withdrawn from the market. The Member State shall immediately inform the Commission and the other Member States of such measures.

3. The Commission shall enter into consultations with the parties concerned as soon as possible. Where, after such consultation, the Commission finds that:

— the measures are justified, it shall immediately so inform the Member State which took the initiative and the other Member States,

— the measures are unjustified, it shall immediately so inform the Member State which took the initiative, the other Member States and the manufacturer or his authorised representative established in the Community.

4. The Commission shall ensure that the Member States are kept informed of the progress and outcome of this procedure.

Article 10

Legal remedies

Any measure taken by a Member State pursuant to this Directive which restricts the placing on the market or putting into service of equipment covered by this Directive shall state the exact reasons on which it is based. Such a measure taken shall be notified as soon as possible to the party concerned, who shall at the same time be informed of the legal remedies available to him under the laws in force in the Member State concerned and of the time limits to which such remedies are subject.

Article 11

Marking

1. Equipment referred to in Article 2(1) placed on the market or put into service which complies with the provisions of this Directive shall bear the CE marking of conformity. The marking shall consist of the initials ‘CE’. The form of the marking to be used is shown in Annex IV.

2. The CE marking shall be accompanied by the indication of the guaranteed sound power level. A model of this indication is given in Annex IV.

3. The CE marking of conformity and the indication of the guaranteed sound power level shall be affixed in a visible, legible and indelible form to each item of equipment.

4. The affixing of markings or inscriptions on the equipment which are likely to be misleading with regard to the meaning or the CE marking or to the indication of the guaranteed sound power level shall be prohibited. Any other marking may be affixed to the equipment, provided that the visibility and legibility of the CE marking and the indication of the guaranteed sound power level is not thereby reduced.

▼B

5. Where the equipment referred to in Article 2(1) is subject to other directives concerning other aspects and which also provide for the affixing of the CE marking, the marking shall indicate that such equipment also fulfils the provisions of those directives. However, should one or more of these directives allow the manufacturer, during a transitional period, to choose which arrangements to apply, the CE marking shall indicate that the equipment only fulfils the provisions of the directives applied by the manufacturer. In this case the particulars of those directives, as published in the *Official Journal of the European Communities*, must be given in the documents, notices or instructions required by those directives and accompanying such equipment.

Article 12

Equipment subject to noise limits

The guaranteed sound power level of equipment listed below shall not exceed the permissible sound power level as laid down in the following tables of limit values:

— builders' hoists for the transport of goods (combustion-engine driven)

Definition: Annex I, item 3. Measurement: Annex III, Part B, item 3

— compaction machines (only vibrating and non-vibrating rollers, vibratory plates and vibratory rammers)

Definition: Annex I, item 8. Measurement: Annex III, Part B, item 8

— compressors (< 350 kW)

Definition: Annex I, item 9. Measurement: Annex III, Part B, item 9

— concrete-breakers and picks, hand-held

Definition: Annex I, item 10. Measurement: Annex III, Part B, item 10

— construction winches (combustion-engine driven)

Definition: Annex I, item 12. Measurement: Annex III, Part B, item 12

— dozers (< 500 kW)

Definition: Annex I, item 16. Measurement: Annex III, Part B, item 16

— dumpers (< 500 kW)

Definition: Annex I, item 18. Measurement: Annex III, Part B, item 18

— excavators, hydraulic or rope-operated (< 500 kW)

Definition: Annex I, item 20. Measurement: Annex III, Part B, item 20

— excavator-loaders (< 500 kW)

Definition: Annex I, item 21. Measurement: Annex III, Part B, item 21

— graders (< 500 kW)

Definitie Annex I, item 23. Measurement: Annex III, Part B, item 23

— hydraulic power packs

Definition: Annex I, item 29. Measurement: Annex III, Part B, item 29

— landfill compactors, loader-type with bucket (< 500 kW)

Definition: Annex I, item 31. Measurement: Annex III, Part B, item 31

▼B

— lawnmowers (excluding agricultural and forestry equipment, and multi-purpose devices, the main motorised component of which has an installed power of more than 20 kW))

Definition: Annex I, item 32. Measurement: Annex III, Part B, item 32

— lawn trimmers/lawn edge trimmers

Definition: Annex I, item 33; Measurement: Annex III, Part B, item 33

— lift trucks, combustion-engine driven, counterbalanced (excluding 'other counterbalanced lift trucks' as defined in Annex I, item 36, second indent with a rated capacity of not more than 10 tonnes)

Definition: Annex I, item 36. Measurement: Annex III, Part B, item 36

— loaders (< 500 kW)

Definition: Annex I, item 37. Measurement: Annex III, Part B, item 37

— mobile cranes

Definition: Annex I, item 38. Measurement: Annex III, Part B, item 38

— motor hoes (< 3 kW)

Definition: Annex I, item 40. Measurement: Annex III, Part B, item 40

— paver-finishers (excluding paver-finishers equipped with a high-compaction screed)

Definition: Annex I, item 41. Measurement: Annex III, Part B, item 41

— power generators (< 400 kW)

Definition Annex I, item 45. Measurement: Annex III, Part B, item 45

— tower cranes

Definition: Annex I, item 53. Measurement: Annex III, Part B, item 53

— welding generators

Definition: Annex I, item 57. Measurement: Annex III, Part B, item 57.

▼M1

Type of equipment	Net installed power P (in kW) Electric power P_{el} (1) in kW Mass of appliance m in kg Cutting width L in cm	Permissible sound power level in dB/1 pW	
		Stage I as from 3 January 2002	Stage II as from 3 January 2006
Compaction machines (vibrating rollers, vibratory plates, vibratory rammers)	$P \leq 8$	108	105 (2)
	$8 < P \leq 70$	109	106 (2)
	$P > 70$	89 + 11 lg P	86 + 11 lg P (2)
Tracked dozers, tracked loaders, tracked excavator-loaders	$P \leq 55$	106	103 (2)
	$P > 55$	87 + 11 lg P	84 + 11 lg P (2)
Wheeled dozers, wheeled loaders, wheeled excavator-loaders, dumpers, graders, loader-type landfill compactors, combustion-engine driven counterbalanced lift	$P \leq 55$	104	101 (2) (3)
	$P > 55$	85 + 11 lg P	82 + 11 lg P (2) (3)

▼M1

Type of equipment	Net installed power P (in kW) Electric power P_{el} (1) in kW Mass of appliance m in kg Cutting width L in cm	Permissible sound power level in dB/1 pW	
		Stage I as from 3 January 2002	Stage II as from 3 January 2006
trucks, mobile cranes, compaction machines (non-vibrating rollers), paver-finishers, hydraulic power packs			
Excavators, builders' hoists for the transport of goods, construction winches, motor hoes	$P \leq 15$	96	93
	$P > 15$	83 + 11 lg P	80 + 11 lg P
Hand-held concrete-breakers and picks	$m \leq 15$	107	105
	$15 < m < 30$	94 + 11 lg m	92 + 11 lg m (2)
	$m \geq 30$	96 + 11 lg m	94 + 11 lg m
Tower cranes		98 + lg P	96 + lg P
Welding and power generators	$P_{el} \leq 2$	97 + lg P_{el}	95 + lg P_{el}
	$2 < P_{el} \leq 10$	98 + lg P_{el}	96 + lg P_{el}
	►C1 $P_{el} > 10$ ◄	97 + lg P_{el}	95 + lg P_{el}
Compressors	$P \leq 15$	99	97
	$P > 15$	97 + 2 lg P	95 + 2 lg P
Lawnmowers, lawn trimmers/lawn-edge trimmers	$L \leq 50$	96	94 (2)
	$50 < L \leq 70$	100	98
	$70 < L \leq 120$	100	98 (2)
	$L > 120$	105	103 (2)

(1) P_{el} for welding generators: conventional welding current multiplied by the conventional load voltage for the lowest value of the duty factor given by the manufacturer.
P_{el} for power generators: prime power according to ISO 8528-1:1993, clause 13.3.2

(2) The figures for stage II are merely indicative for the following types of equipment:
— walk-behind vibrating rollers;
— vibratory plates (> 3kW);
— vibratory rammers;
— dozers (steel tracked);
— loaders (steel tracked > 55 kW);
— combustion-engine driven counterbalanced lift trucks;
— compacting screed paver-finishers;
— hand-held internal combustion-engine concrete-breakers and picks (15 < m < 30)
— lawnmowers, lawn trimmers/lawn-edge trimmers.
Definitive figures will depend on amendment of the Directive following the report required in Article 20(1). In the absence of any such amendment, the figures for stage I will continue to apply for stage II.

(3) For single-engine mobile cranes, the figures for stage I shall continue to apply until 3 January 2008. After that date, stage II figures shall apply.

The permissible sound power level shall be rounded up or down to the nearest integer number (less than 0,5, use lower number; greater than or equal to 0,5, use higher number)

▼B

Article 13

Equipment subject to noise marking only

The guaranteed sound power level of equipment listed below shall be subject to noise marking only:

— aerial access platforms with combustion engine
Definition: Annex I, item 1. Measurement: Annex III, Part B, item 1

— brush cutters
Definition: Annex I, item 2; Measurement: Annex III, Part B, item 2

— builders' hoists for the transport of goods (with electric motor)
Definition: Annex I, item 3. Measurement: Annex III, Part B, item 3

— building site band saw machines
Definition: Annex I, item 4. Measurement: Annex III, Part B, item 4

— building site circular saw benches
Definition: Annex I, item 5. Measurement: Annex III, Part B, item 5

— chain saws, portable
Definition: Annex I, item 6. Measurement: Annex III, Part B, item 6

— combined high pressure flushers and suction vehicles
Definition: Annex I, item 7. Measurement: Annex III, Part B, item 7

— compaction machines (explosion rammers only)
Definition: Annex I, item 8. Measurement: Annex III, Part B, item 8

— concrete or mortar mixers
Definition: Annex I, item 11. Measurement: Annex III, Part B, item 11

— construction winches (with electric motor)
Definition: Annex I, item 12. Measurement: Annex III, Part B, item 12

— conveying and spraying machines for concrete and mortar
Definition: Annex I, item 13. Measurement: Annex III, Part B, item 13

— conveyor belts
Definition: Annex I, item 14. Measurement: Annex III, Part B, item 14

— cooling equipment on vehicles
Definition: Annex I, item 15. Measurement: Annex III, Part B, item 15

— drill rigs
Definition: Annex I, item 17. Measurement: Annex III, Part B, item 17

— equipment for loading and unloading silos or tanks on trucks
Definition: Annex I, item 19. Measurement: Annex III, Part B, item 19

— glass recycling containers
Definition: Annex I, item 22. Measurement: Annex III, Part B, item 22

— grass trimmers/grass edge trimmers
Definition: Annex I, item 24. Measurement: Annex III, Part B, item 24

— hedge trimmers
Definition: Annex I, item 25. Measurement: Annex III, Part B, item 25

▼B

— high pressure flushers

Definition: Annex I, item 26. Measurement: Annex III, Part B, item 26

— high pressure water jet machines

Definition: Annex I, item 27. Measurement: Annex III, Part B, item 27

— hydraulic hammers

Definition: Annex I, item 28. Measurement: Annex III, Part B, item 28

— joint cutters

Definition: Annex I, item 30. Measurement: Annex III, Part B, item 30

— leaf blowers

Definition: Annex I, item 34. Measurement: Annex III, Part B, item 34

— leaf collectors

Definition: Annex I, item 35. Measurement: Annex III, Part B, item 35

— lift trucks, combustion-engine driven, couterbalanced (only ‘other counterbalanced lift trucks’ as defined in Annex I, item 36, second indent, with a rated capacity of not more than 10 tonnes)

Definition: Annex I, item 36. Measurement: Annex III, Part B, item 36

— mobile waste containers

Definition: Annex I, item 39. Measurement: Annex III, Part B, item 39

— paver-finishers (equipped with a high-compaction screed)

Definition: Annex I, item 41. Measurement: Annex III, Part B, item 41

— piling equipment

Definition: Annex I, item 42. Measurement: Annex III, Part B, item 42

— pipelayers

Definition: Annex I, item 43. Measurement: Annex III, Part B, item 43

— piste caterpillars

Definition: Annex I, item 44. Measurement: Annex III, Part B, item 44

— power generators (≥ 400 kW)

Definition: Annex I, item 45. Measurement: Annex III, Part B, item 45

— power sweepers

Definition: Annex I, item 46. Measurement: Annex III, Part B, item 46

— refuse collection vehicles

Definition: Annex I, item 47. Measurement: Annex III, Part B, item 47

— road milling machines

Definition: Annex I, item 48. Measurement: Annex III, Part B, item 48

— scarifiers

Definition: Annex I, item 49. Measurement: Annex III, Part B, item 49

— shredders/chippers

Definition: Annex I, item 50. Measurement: Annex III, Part B, item 50

— snow-removing machines with rotating tools (self-propelled, excluding attachments)

▼B

Definition: Annex I, item 51. Measurement: Annex III, Part B, item 51

— suction vehicles

Definition: Annex I, item 52. Measurement: Annex III, Part B, item 52

— trenchers

Definition: Annex I, item 54. Measurement: Annex III, Part B, item 54

— truck mixers

Definition: Annex I, item 55. Measurement: Annex III, Part B, item 55

— water pump units (not for use under water)

Definition: Annex I, item 56. Measurement: Annex III, Part B, item 56.

Article 14

Conformity assessment

1. Before placing on the market or putting into service any equipment referred to in Article 12 the manufacturer, or his authorised representative established in the Community, shall subject each type of equipment to one of the following conformity assessment procedures:

— the internal control of production with assessment of technical documentation and periodical checking procedure referred to in Annex VI, or

— the unit verification procedure referred to in Annex VII, or

— the full quality assurance procedure referred to in Annex VIII.

2. Before placing on the market or putting into service any equipment referred to in Article 13 the manufacturer, or his authorised representative established in the Community, shall subject each type of equipment to the internal control of production procedure referred to in Annex V.

3. Member States shall ensure that the Commission and any other Member State may, on a reasoned request, obtain all information used during the conformity assessment procedure concerning a type of equipment and in particular the technical documentation provided for in Annex V item 3, Annex VI item 3, Annex VII item 2, Annex VIII items 3.1 an 3.3.

Article 15

Notified bodies

1. Member States shall appoint bodies under their jurisdiction to carry out or supervise the conformity assessment procedures referred to in Article 14(1).

2. Member States shall appoint only such bodies which comply with the criteria set out in Annex IX. The fact that a body complies with the criteria of Annex IX to this Directive does not mean that a Member State is obliged to appoint that body.

3. Each Member State shall notify the Commission and the other Member States of the bodies which they have appointed, together with the specific tasks and examination procedures which these bodies have been appointed to carry out and the identification numbers assigned to them beforehand by the Commission.

▼B

4. The Commission shall publish a list of the notified bodies in the *Official Journal of the European Communities* along with their identification numbers and the tasks for which they have been appointed. The Commission shall ensure that the list is kept up to date.

5. A Member State must withdraw its notification if it finds that the body no longer meets the criteria referred to in Annex IX. It shall forthwith inform the Commission and the other Member States accordingly.

Article 16

Collection of noise data

1. Member States shall take the measures necessary to ensure that the manufacturer, or his authorised representative established in the Community, shall send to the responsible authority of the Member State where he resides or where he places on the market or puts into service the equipment referred to in Article 2(1) and to the Commission a copy of the EC declaration of conformity for each type of equipment referred to in Article 2(1).

2. The Commission shall collect the data made available in accordance with paragraph 1 for all equipment.

3. Member States may, on request, obtain the collected data from the Commission.

4. The Commission shall publish the relevant information periodically, preferably annually. These publications shall at least contain the following data for each type or model of equipment:

— the net installed power or any other noise related value

— the measured sound power level

— the guaranteed sound power level

— equipment description

— manufacturer and/or brand name

— model number/name

Article 17

Regulation of use

The provisions of this Directive shall not prevent Member States' entitlement to lay down, in due observance of the Treaty:

— measures to regulate the use of equipment referred to in Article 2(1) in areas which they consider sensitive, including the possibility of restricting the working hours of the equipment,

— such requirements as they may deem necessary to ensure that persons are protected when using the equipment in question, provided that this does not mean that the equipment is modified in a way not specified in this Directive.

▼B

Article 18

Committee

1. The Commission shall be assisted by a Committee.

▼M3

_____

▼M2

_____

▼M3

Article 18a

Amendments to Annex III

The Commission is empowered to adopt delegated acts in accordance with Article 18b amending Annex III to adapt it to technical progress. Those delegated acts shall not have any direct impact on the measured sound power level of equipment listed in Article 12, in particular through the inclusion of references to relevant European standards.

Article 18b

Exercise of the delegation

1. The power to adopt delegated acts is conferred on the Commission subject to the conditions laid down in this Article.

2. The power to adopt delegated acts referred to in Article 18a shall be conferred on the Commission for a period of five years from 26 July 2019. The Commission shall draw up a report in respect of the delegation of power not later than nine months before the end of the five-year period. The delegation of power shall be tacitly extended for periods of an identical duration, unless the European Parliament or the Council opposes such extension not later than three months before the end of each period.

3. The delegation of power referred to in Article 18a may be revoked at any time by the European Parliament or by the Council. A decision to revoke shall put an end to the delegation of the power specified in that decision. It shall take effect the day following the publication of the decision in the *Official Journal of the European Union* or at a later date specified therein. It shall not affect the validity of any delegated acts already in force.

4. Before adopting a delegated act, the Commission shall consult experts designated by each Member State in accordance with the principles laid down in the Interinstitutional Agreement of 13 April 2016 on Better Law-Making ([1]).

5. As soon as it adopts a delegated act, the Commission shall notify it simultaneously to the European Parliament and to the Council.

6. A delegated act adopted pursuant to Article 18a shall enter into force only if no objection has been expressed either by the European Parliament or the Council within a period of two months of notification of that act to the European Parliament and the Council or if, before the expiry of that period, the European Parliament and the Council have both informed the Commission that they will not object. That period shall be extended by two months at the initiative of the European Parliament or of the Council.

([1]) OJ L 123, 12.5.2016, p. 1.

▼B

Article 19

Committee powers

The Committee shall:

(a) exchange information and experiences concerning the implementation and practical application of this Directive and discuss matters of common interest in those fields;

▼M3

_____

▼B

(c) provide advice to the Commission with respect to the conclusions and amendments referred to in Article 20(2).

Article 20

Reports

1. ►M1 Not later than 3 January 2007 ◄ and every four years thereafter, the Commission shall submit to the European Parliament and to the Council a report concerning the Commission's experience in the implementation and administration of this Directive. The report shall in particular contain:

▼M5

_____

▼B

(b) a statement of the need for revision of the lists in Articles 12 and 13, especially whether new equipment should be added in either Article 12 or Article 13 or equipment should be transferred from Article 13 to Article 12;

(c) a statement of the need and the possibilities for revision of the limit values laid down in Article 12 taking into account technological development;

(d) a statement setting out an integrated range of instruments to be used in continuing the reduction of noise by equipment.

2. After having held all the necessary consultations, in particular with the Committee, the Commission shall on that occasion present its conclusions and where appropriate any amendment to this Directive.

▼M1

_____

▼B

Article 21

Repeal

1. Directives 79/113/EEC, 84/532/EEC, 84/533/EEC, 84/534/EEC, 84/535/EEC, 84/536/EEC, 84/537/EEC, 84/538/EEC and 86/662/EEC shall be repealed on 3 January 2002.

2. Type-examination certificates issued and measurements of equipment carried out under the Directives mentioned in paragraph 1 may be used in drawing up the technical documentation provided for in Annex V point 3, Annex VI point 3, Annex VII point 2, Annex VIII points 3.1 and 3.3 of this Directive.

▼B

Article 22

Transposition and date of application

1. Member States shall adopt and publish the laws, regulations and administrative provisions necessary to comply with this Directive no later than 3 July 2001. They shall forthwith inform the Commission thereof.

2. Member States shall apply these measures with effect from 3 January 2002. However, Member States shall allow the manufacturer, or his authorised representative established in the Community, to avail himself of the provisions of this Directive as from 3 July 2001.

3. With regard to the reduced permissible sound power levels of stage II referred to in Article 12, these provisions shall apply with effect from 3 January 2006.

4. When Member States adopt these measures, they shall contain a reference to this Directive or shall be accompanied by such reference on the occasion of their official publication. The methods of making such reference shall be laid down by Member States.

5. Member States shall communicate to the Commission the texts of the provisions of national law which they adopt in the field governed by this Directive.

Article 23

Entry into force

This Directive shall enter into force on the day of its publication in the *Official Journal of the European Communities*.

Article 24

Addressees of the Directive

This Directive is addressed to the Member States.

▼B

ANNEX I

DEFINITIONS OF EQUIPMENT

1. **Aerial access platforms with combustion engines**

   Equipment consisting of a minimum of a work platform, an extending structure and a chassis. The work platform is a fenced platform or a cage which can be moved under load to the required working position. The extending structure is connected to the chassis and supports the work platform; it allows movement of the work platform to its required position.

2. **Brush cutter**

   A combustion-engine driven portable hand-held unit fitted with a rotating blade made of metal or plastic intended to cut weeds, brush, small trees and similar vegetation. The cutting device operates in a plane approximately parallel to the ground.

3. **Builders' hoist for the transport of goods**

   A power-operated, temporarily installed builders' hoist intended for use by persons who are permitted to enter engineering and construction sites, serving

   (i) defined landing levels, having a platform

   — designed for the transportation of goods only

   — which permits the access of persons during loading and unloading

   — which permits the access and travel by authorised persons during erection, dismantling and maintenance

   — guided

   — travelling vertical or along a path within 15° max. of the vertical

   — supported or sustained by: wire, rope, chain, screwed spindle and nut, rack and pinion, hydraulic jack (direct or indirect), or an expanding linkage mechanism

   — where masts may or may not require support from separate structures, or

   (ii) either one upper landing or a work area extending to the end of the guide (e.g. a roof), having a load-carrying device:

   — designed for the transportation of goods only

   — designed that there is no need to step on it for loading or unloading purposes or for maintenance, erection and dismantling

   — from which persons are prohibited at any time

   — guided

   — which is designed to travel at an angle of at least 30° to the vertical but may be used at any angle

   — sustained by steel wire rope and a positive drive system

   — controlled by constant pressure type controls

   — which does not benefit from the use of any counterweight

   — having a maximum rated load of 300 kg

   — having a maximum speed of 1m/s

▼B

— and where the guides require support from separate structures.

4. **Building site band saw machine**

A hand-fed powered machine weighing less than 200 kg fitted with a single saw blade in the form of a continuous band mounted on and running between two or more pulleys.

5. **Building site circular saw bench**

A hand-fed machine weighing less than 200 kg fitted with a single circular sawblade (other than a scoring saw) with a diameter of 350 mm or more, up to a maximum diameter of 500 mm, which is fixed during the normal cutting operation, and a horizontal table, all or part of which is fixed during operation. The sawblade is mounted on a horizontal non-tilting spindle, the position of which remains stationary during machining. The machine may have any of the following features:

— the facility for the sawblade to be raised and lowered through the table

— machine frame below the table may be open or enclosed

— the saw may be fitted with an additional, manually operated travelling table (not adjacent to the sawblade).

6. **Chain saw, portable**

A power-driven tool designed to cut wood with a saw chain and consisting of an integrated compact unit of handles, power source and cutting attachment, designed to be supported with two hands.

7. **Combined high pressure flusher and suction vehicle**

A vehicle which may work either as a high pressure flusher or as a suction vehicle. See high pressure flusher and suction vehicle.

8. **Compaction machine**

A machine which compacts materials, e.g. rock fills, soil or asphalt surfacing, through a rolling, tamping or vibrating action of the working tool. It may be self-propelled, towed, walk-behind or an attachment to a carrying machine. Compaction machines are subdivided as follows:

— rollers for ride-on operators: self-propelled compaction machines with one or more metallic cylindrical bodies (drums) or rubber tyres; the operator's station is an integral part of the machine

— walk-behind rollers: self-propelled compaction machines with one or more metallic cylindrical bodies (drums) or rubber tyres in which the operation facilities for travelling, steering, braking and vibrating are disposed in such a way that the machines have to be operated by an attending operator or by remote control

— towed roller: compaction machines with one or more metallic cylindrical bodies (drums) or rubber tyres which do not possess an independent drive system and where the operator's station is to be found on a tractor unit

— vibratory plates and vibratory rammers: compactions machines with mainly flat base plates which are made to vibrate. They are operated by an attending operator or as an attachment to a carrier machine

— explosion rammers: compaction machines with mainly a flat pad as the compacting tool which is made to move in a predominantly vertical direction by explosion pressure. The machine is operated by an attending operator.

▼B

9. **Compressor**

Any machine for use with interchangeable equipment which compresses air, gases or vapours to a pressure higher than the inlet pressure. A compressor comprises the bare compressor itself, the prime mover and any component or device supplied, which is necessary for safe operation of the compressor.

Excluded are the following categories of device:

— fans, i.e. devices producing air circulation at a positive pressure of not more than 110 000 pascals

— vacuum pumps, i.e. devices or appliances for extracting air from an enclosed space at a pressure not exceeding atmospheric pressure

— gas turbine engines.

10. **Concrete-breakers and picks, hand held**

Powered (by any method) concrete-breakers and picks used to perform work on civil engineering and building sites.

11. **Concrete or mortar mixer**

A machine to prepare concrete or mortar, irrespective of the loading, mixing and emptying process. It may be operated intermittently or constantly. Concrete mixers on trucks are called truck mixers (see definition 55).

12. **Construction winch**

A power-operated, temporarily installed lifting appliance which is equipped with means for raising and lowering a suspended load.

13. **Conveying and spraying machine for concrete and mortar**

Items of plant pumping and spraying concrete or mortar, with or without agitator, whereby the material to be transported is conveyed to the placing position through pipelines, distribution devices or distribution booms. Conveyance is carried out:

— for concrete mechanically, by piston or rotor pumps

— for mortar mechanically by piston, worm, hose and rotor pumps or pneumatically by compressors with or without air chamber.

These machines may be mounted on trucks, trailers or special vehicles.

14. **Conveyor belt**

A temporarily installed machine suitable for transporting material by means of a power-driven belt.

15. **Cooling equipment on vehicles**

A cargo space refrigeration unit on vehicle categories N2, N3, O3 and O4 as defined by Directive 70/156/EEC.

The refrigeration unit may be powered by means of an integral part of the refrigeration unit, a separate part attached to the vehicle body, a driving engine of the vehicle, or by an independent or standby power source.

16. **Dozer**

A self-propelled wheeled or crawler machine used to exert a push or pull force through mounted equipment.

▼B

17. **Drill rig**

A machine which is used for drilling holes on construction sites by

— percussive drilling

— rotary drilling

— rotary percussive drilling.

Drill rigs are stationary during drilling. They may move from one place of work to another, under their own power. Self-propelled drill rigs include those mounted on lorries, wheeled chassis, tractors, crawlers, skid bases (pulled by winch). When drill rigs are mounted on lorries, tractors and trailers, or a wheel-based, transportation may be carried out at higher speeds and on public roads.

18. **Dumper**

A self-propelled machine wheeled or crawler machine having an open body, which either transports and dumps or spreads material. Dumpers may be equipped with integral self-loading equipment.

19. **Equipment for loading and unloading of silos or tanks on trucks**

Powered devices attached to silo or tanker trucks for loading or unloading of liquids or bulk material by means of pumps or similar equipment.

20. **Excavator, hydraulic or rope-operated**

A self-propelled crawler or wheeled machine having an upper structure capable of a minimum of 360° rotation, which excavates, swings and dumps material by the action of a bucket fitted to the boom and arm or telescopic boom, without moving the chassis or undercarriage during any one cycle of the machine.

21. **Excavator-loader**

A self-propelled wheeled or crawler machine having a main structural support designed to carry both a front-mounted bucket loading mechanism and a rear-mounted backhoe. When used in the backhoe mode, the machine normally digs below ground level with bucket motion towards the machine. The backhoe lifts, swings and discharges material while the machine is stationary. When used in the loader mode, the machine loads or excavates through forward motion of the machine, and lifts, transports and discharges material.

22. **Glass recycling container**

A container, built of whatever material, that is used for the collection of bottles. It is equipped with at least one opening for filling in bottles and another one for emptying the container.

23. **Grader**

A self-propelled wheeled machine having an adjustable blade, positioned between front and rear axles, which cuts, moves and spreads material usually to grade requirements.

24. **Grass trimmer/grass edge trimmer**

A combustion-engine driven portable hand-held unit fitted with flexible line (s), string(s), or similar non-metallic flexible cutting elements, such as pivoting cutters, intended to cut weeds, grass or similar soft vegetation. The cutting device operates in a plane approximately parallel (grass trimmer) or perpendicular (grass edge trimmer) to the ground.

▼B

25. **Hedge trimmer**

Hand-held, integrally driven powered equipment which is designed for use by one operator for trimming hedges and bushes utilising one or more linear reciprocating cutter blades.

26. **High pressure flusher**

A vehicle equipped with a device to clean sewers or similar installations by means of a high pressure water jet. The device may be either mounted on a proprietary vehicular truck chassis or incorporated into its own chassis embodiment. The equipment may be fixed or demountable as in the case of an exchangeable bodywork system.

27. **High pressure water jet machine**

A machine with nozzles or other speed-increasing openings which allow water, also with admixtures, to emerge as a free jet. In general, high pressure jet machines consist of a drive, a pressure generator, hose lines, spraying devices, safety mechanisms, controls and measurement devices. High pressure water jet machines may be mobile or stationary:

— mobile high pressure water jet machines are mobile, readily transportable machines which are designed to be used at various sites, and for this purpose are generally fitted with their own undergear or are vehicle-mounted. All necessary supply lines are flexible and readily disconnectable

— stationary high pressure water jet machines are designed to be used at one site for a length of time but capable of being moved to another site with suitable equipment. Generally skid or frame-mounted with supply line capable of being disconnected.

28. **Hydraulic hammer**

Equipment which uses the hydraulic power source of the carrier machine to accelerate a piston (sometimes gas-assisted), which then hits a tool. The stress wave generated by kinetic action flows through the tool into the material, which causes the material to break. Hydraulic hammers need a supply of pressurised oil to function. The complete carrier/hammer unit is controlled by an operator, usually seated in the cabin of the carrier.

29. **Hydraulic power pack**

Any machine for use with interchangeable equipment which compresses liquids to a pressure higher than the inlet pressure. It means an assembly of a prime mover, pump, with or without reservoir and accessories (e.g. controls, pressure relief valve).

30. **Joint cutter**

A mobile machine intended for the production of joints in concrete, asphalt and similar road surfaces. The cutting tool is a rotating high speed disc. The forward motion of the joint cutter can be

— manual

— manual with mechanical assistance

— power-driven.

▼B

31. **Landfill compactor, loader-type with bucket**

A self-propelled wheeled compaction machine having a front-mounted loader linkage with a bucket having steel wheels (drums) primarily designed to compact, move, grade, and load soil, landfill or sanitary (refuse) materials.

32. **Lawnmower**

A walk-behind or ride-on grass cutting machine or a machine with grass-cutting attachment(s) where the cutting device operates in a plane approximately parallel to the ground and which uses the ground to determine the height of cut by means of wheels, air cushion or skids, etc., and which utilises an engine or an electric motor for a power source. The cutting devices are either

— rigid cutting elements, or

— non-metallic filament line(s) or freely pivoting non-metallic cutter(s) with a kinetic energy of more than 10 J each; the kinetic energy is determined using EN 786:1997, Annex B.

Also a walk-behind or ride-on grass cutting machine or a machine with grass-cutting attachment(s) where the cutting device is rotating about a horizontal axis to provide a shearing action with a stationary cutter bar or knife (cylinder mower).

33. **Lawn trimmer/lawn edge trimmer**

An electrically powered walk-behind or hand-held grass cutting machine with cutting element(s) of non-metallic filament line(s) or freely pivoting non-metallic cutters with a kinetic energy of not more than 10 J each, intended to cut grass or similar soft vegetation. The cutting element(s) operate(s) in a plane approximately parallel (lawn trimmer) or perpendicular (lawn edge trimmer) to the ground. The kinetic energy is determined using EN 786:1997, Annex B.

34. **Leaf blower**

A powered machine appropriate to clear lawns, paths, ways, streets, etc. of leaves and other material by means of a high velocity air flow. It may be portable (hand-held) or not portable but mobile.

35. **Leaf collector**

A powered machine suitable for collecting leaves and other debris using a suction device consisting of a power source which produces a vacuum inside the machine and a suction nozzle and a container for the collected material. It may be portable (hand-held) or not portable but mobile.

36. **Lift truck, combustion-engine driven, counterbalanced**

A wheeled, internal combustion-engine driven lift truck with counterweight and lifting equipment (mast, telescopic arm or articulated arm). These are:

— rough terrain trucks (wheeled counterbalanced trucks intended primarily for operation on unimproved natural terrain and on disturbed terrain of, e.g., construction sites)

— other counterbalanced lift trucks, excluded are those counterbalanced lift trucks that are specifically constructed for container handling.

▼B

37. **Loader**

A self-propelled wheeled or crawler machine having an integral front-mounted bucket-supporting structure and linkage, which loads or excavates through forward motion of the machine, and lifts, transports and discharges material.

38. **Mobile crane**

A self-powered jib crane capable of travelling, loaded or unloaded, without the need for fixed runways and relying on gravity for stability. It operates on tyres, crawlers or with other mobile arrangements. In fixed positions it may be supported by outriggers or other accessories increasing its stability. The superstructure of a mobile crane may be of the type of full-circle slewing, of limited slewing or non-slewing. It is normally equipped with one or more hoists and/or hydraulic cylinders for lifting and lowering the jib and the load. Mobile cranes are equipped either with telescopic jibs, with articulated jibs, with lattice jibs, or a combination of these, of such a design that may readily be lowered. The loads suspended from the jib may be handled by hook block assemblies or other load-lifting attachments for special services.

39. **Mobile waste container**

An appropriate designed container fitted with wheels intended to store waste temporarily, and which is equipped with a cover.

40. **Motor hoe**

A self-propelled machine designed to be pedestrian-controlled

— with or without support wheel(s), in such a way that its working elements act as hoeing tools to ensure propulsion (motor hoe), and

— propelled by one or various wheel(s) directly actuated from the engine and equipped with hoeing tools (motor hoe with drive wheel(s)).

41. **Paver-finisher**

A mobile road construction machine used for the purpose of applying layers of construction material, such as bituminous mix, concrete and gravel on surfaces. Paver-finishers may be equipped with a high-compaction screed.

42. **Piling equipment**

Pile installation and extraction equipment, e.g. impact hammers, extractors, vibrators or static pile pushing/pulling devices of an assembly of machines and components used for installation or extraction of piles, which also includes:

— piling rig consisting of carrier machine (crawler, wheel or rail mounted, floating leader attachment, leader or guiding system)

— accessories, e.g. pile caps, helmets, plates, followers, clamping devices, pile handling devices, pile guides, acoustic shrouds and shock/vibration absorbing devices, power packs/generators and personal lifting devices or platforms.

43. **Pipelayer**

A self-propelled crawler or wheeled machine specifically designed to handle and lay pipes and carry pipeline equipment. The machine, the design of which is based on a tractor, has especially designed components such as undercarriage, main frame, counterweight, boom and load-hoist mechanism, and vertically pivoting side boom.

▼B

44. **Piste caterpillar**

A self-propelled crawler machine used to exert a push or pull force on snow and ice through mounted equipment.

45. **Power generator**

Any device comprising an internal combustion engine driving a rotary electrical generator producing a continuous supply of electrical power.

46. **Power sweeper**

A sweeping collection machine having equipment to sweep debris into the path of a suction inlet that would then pneumatically by way of a high velocity airstream or with a mechanical pick-up system convey the debris to a collection hopper. The sweeping and collecting devices may either be mounted to a proprietary vehicular truck chassis or incorporated into its own chassis embodiment. The equipment can be fixed or demountable as in the case of an exchangeable bodywork system.

47. **Refuse collection vehicle**

A vehicle designed for the collection and transportation of domestic and bulky waste based on loading via containers or by hand. The vehicle may be equipped with a compaction mechanism. A refuse collection vehicle comprises a chassis with cab onto which the bodywork is mounted. It may be equipped with a container lifting device.

48. **Road-milling machine**

A mobile machine used for removing material from paved surfaces using a power-driven cylindrical body, on which surface the milling tools are fitted; the cutter drums rotate during the cutting operation.

49. **Scarifier**

A walk-behind or ride-on powered machine which uses the ground to determine the depth of cut and which is equipped with an assembly appropriate to slit or scratch the surface of the lawn in gardens, parks and other similar areas.

50. **Shredder/chipper**

A powered machine designed for use in a stationary position having one or more cutting devices for the purpose of reducing bulk organic materials to smaller pieces. Generally it consists of a feed intake opening through which material (which may be held by an appliance or not) is inserted, a device which cuts up the material by whatever method (cutting, chopping, crushing or other methods) and a discharge chute through which the cut material is discharged. A collecting device may be attached.

51. **Snow-removing machine with rotating tools**

A machine with which snow can be removed from traffic areas by rotating means, accelerated and ejected by blower means.

52. **Suction vehicle**

A vehicle equipped with a device to collect water, mud, sludge, refuse or similar material from sewers or similar installations by means of a vacuum. The device may be either mounted on a proprietary vehicular truck chassis or incorporated into its own chassis embodiment. The equipment may be fixed or demountable as in the case of an exchangeable bodywork system.

53. **Tower crane**

A slewing jib crane with the jib located at the top of a tower which stays approximately vertical in the working position. This power-driven appliance is equipped with means for raising and lowering suspended loads and for the

▼B

movement of such loads by changing the load-lifting radius, slewing, travelling of the complete appliance. Certain appliances perform several but not necessarily all of these movements. The appliance can be installed in a fixed position or equipped with means for displacing or climbing.

54. **Trencher**

A self-propelled, ride-on or pedestrian-controlled, crawler or wheeled machine, having a front- or rear-mounted excavator linkage and attachment, primarily designed to produce trenches in a continuous operation, through a motion of the machine.

55. **Truck mixer**

A vehicle which is equipped with a drum to transport ready-mixed concrete from the concrete mixing plant to the job site; the drum may rotate when the vehicle is driving or stand still. The drum is emptied on the job site by rotating the drum. The drum is driven either by the driving engine of the vehicle or by a supplementary engine.

56. **Water pump unit**

A machine consisting of a water pump itself and the driving system. Water pump means a machine for the raising of water from a lower to a higher energy level.

57. **Welding generator**

Any rotary device which produces a welding current.

▼B

ANNEX II

EC DECLARATION OF CONFORMITY

The EC declaration of conformity must contain the following particulars:

— name and address of the manufacturer or his authorised representative established in the Community

— name and address of the person who keeps the technical documentation

— description of the equipment

— conformity assessment procedure followed, and, where appropriate, name and address of the notified body involved

— measured sound power level on an equipment representative for this type

— guaranteed sound power level for this equipment

— a reference to this Directive

— the declaration that the equipment conforms to the requirements of this Directive

— where appropriate, the declaration(s) of conformity and references of the other Community Directives applied

— the place and date of the declaration

— particulars of the signatory authorised to sign the legally binding declaration for the manufacturer or his authorised representative established in the Community.

▼M4

ANNEX III

METHODS TO MEASURE AIRBORNE NOISE EMITTED BY EQUIPMENT FOR USE OUTDOORS

Introduction

This Annex contains the methods to measure airborne noise that are to be used to determine the sound power levels of equipment for use outdoors.

Part A of this Annex lays down the basic noise emission standard and general supplements to the basic noise emission standard to measure the sound pressure level on a measurement surface enveloping the noise source and to calculate the sound power level produced by that source.

Part B of this Annex lays down the equipment specific noise test code which is presented either as a reference to a specific standard or as a description of the applicable testing and operating conditions, including:

(a) the test environment;

(b) the value of the environmental correction (K_{2A});

(c) the shape and dimensions of the measurement surface;

(d) the number and position of microphones to be used;

(e) requirements relating to mounting and installation of the equipment;

(f) a method to calculate the resulting sound power levels in the event that several tests with different operating conditions are to be used.

When testing specific types of equipment, manufacturers or their authorised representatives in the Union shall use the basic noise emission standard and the general supplements of Part A of this Annex, and the equipment specific noise test code laid down in Part B. Noise test codes in Part B are meant to supplement the specifications laid down in Part A taking into account the characteristics of the different equipment categories. When noise test codes in Part B provide for the possibility to choose between different alternative technical solutions, manufacturers or their authorised representatives in the Union shall use those that are in line with the specifications laid down in Part A. In case of conflict between Part A and Part B, Part B provisions shall take precedence.

Where the noise test codes laid down in Part B, or in the standards referred to in Part B, would not be applicable for some models of equipment within the equipment category, manufacturers or their authorised representatives in the Union shall determine the guaranteed sound power level in accordance with the basic noise emission standard and the applicable supplements indicated in Part A.

For equipment listed in Article 12, where the use of the noise measurement methods laid down in this Annex or those laid down in the version of Annex III that was applicable before 22 May 2025, would lead to two different situations of conformity of the product, i.e. the guaranteed sound power level of the equipment calculated using one method exceeds the respective permissible sound power level in Article 12 but not when using the other method, manufacturers or their authorised representatives in the Union shall determine the measured sound power level and the guaranteed sound power level in accordance with the methods laid down in the version of Annex III that was applicable before 22 May 2025 until the permissible sound power levels in Article 12 are amended. In that situation, notified bodies and market surveillance authorities shall also use the method laid down in the version of Annex III that was applicable before 22 May 2025, to perform the noise tests when required in the applicable conformity assessment procedure.

▼M4

PART A

BASIC NOISE EMISSION STANDARD

Manufacturers or their authorised representatives in the Union shall use the basic noise emission standard EN ISO 3744:2010 to determine the sound power level L_{WA}, subject to the general supplements laid down in this Part A. Manufacturers or their authorised representatives in the Union shall apply all clauses in EN ISO 3744:2010 unless otherwise stated in this Part A, or in the applicable noise test code laid down in Part B of this Annex.

1. OPERATION OF THE NOISE SOURCE DURING THE TEST

1.1. **Fan speed**

Any fans fitted to the engine of the equipment or its hydraulic system shall operate during the test. Manufacturers or their authorised representatives in the Union shall set the fan speed in accordance with the requirements laid down in points (a) to (d), as applicable, and state that fan speed in the test report and use it in further measurements. Fans shall not operate in reverse mode during tests.

(a) Fan drive directly connected to the engine or its hydraulic system:

A fan drive that is directly connected to the engine or its hydraulic equipment shall operate during the test.

(b) Fan drive with several distinct speeds:

A fan that can work at several distinct speeds shall be tested in either of the following ways:

(i) at its maximum working speed;

(ii) in a first test with the fan set at zero speed, and in a second test with the fan set at maximum speed.

For the purposes of point (ii), the resulting A-weighted surface sound pressure level L_{pA} shall be calculated by combining both test results using the following equation:

▼C2

$$L_{pA} = 10 \lg (0{,}3 \times 10^{0{,}1\ L_{pA,\ 0\ \%}} + 0{,}7 \times 10^{0{,}1\ L_{pA,100\ \%}})$$

▼M4

where:

— $L_{pA,0\ \%}$ is the A-weighted surface sound pressure level determined with the fan set at zero speed;

— $L_{pA,100\ \%}$ is the A-weighted surface sound pressure level determined with the fan set at maximum speed;

(c) Fan drive with continuous variable speed:

A fan that can work at continuous variable speed shall be tested in accordance with point 1.1(b) or with the fan speed set at no less than 70 % of the maximum speed.

Visco-static fans, which are automatically regulated by the engine temperature, shall be considered to work at continuous variable speed irrespective of the origin of the control;

▼M4

(d) Equipment with more than one fan:

Where a machine is equipped with more than one fan, all fans shall run under the conditions specified in (a), (b) or (c), as applicable.

1.2. **Test of powered equipment free of load**

Before measuring the noise emitted by powered equipment free of load, manufacturers or their authorised representatives in the Union shall warm up the engine and hydraulic system of the equipment in accordance with the instructions of use and shall observe the safety requirements.

Manufacturers or their authorised representatives in the Union shall measure the noise with the equipment in stationary position, without operating the working equipment or travelling mechanism. For the purpose of the measurement, the engine shall idle ([1]) at no less than the rated speed corresponding to the net power ([2]).

Where the machine is powered by a generator or from the mains, the frequency of the supply current, specified for the motor by the manufacturer, shall be stable at ± 1 Hz if the machine is equipped with an induction motor, and the supply voltage at ± 1 % of the rated voltage if the machine is equipped with a commutator motor. The supply voltage shall be measured at the plug of a non-detachable cable or cord, or at the inlet of the machine if a detachable cable is provided. The waveform of the current supplied from the generator shall be similar to that obtained from the mains.

Where multiple voltage ranges are labelled at the machine, manufacturers or their authorised representatives in the Union shall take the measurements at the highest labelled voltage range. If the voltage range is 220-240 V, the test shall be carried out at 230 V.

If the machine is powered by one or more batteries, the batteries shall be charged to at least 70 % of its capacity.

The rated speed used, and the corresponding net power, shall be stated by the manufacturers or their authorised representatives in the Union in the test report.

Where the equipment has several engines, those engines shall work simultaneously during the measurements, unless that is not possible, in which case the noise emissions of each possible combination of engines shall be measured.

1.3. **Test of powered equipment under load**

Before measuring the noise emitted by powered equipment under load, manufacturers or their authorised representatives in the Union shall warm up the engine (driving device) and hydraulic system of the equipment up in accordance with the instructions of use, and shall observe safety requirements. The manufacturers or their authorised representatives in the Union shall not operate a signalling device, such as a warning horn or reversing alarm, during the measurement.

([1]) Idle of an engine may be run either at the lowest engine speed (full release of a throttle) or at the lowest engine speed required to perform basic functions, including giving sufficient hydraulic pressure to move the machine or any of its tools, as applicable for the specific equipment category.

([2]) Net power means the engine power in ‘kW’ obtained on a test bench at the end of the crankshaft, or its equivalent, measured in accordance with the method of measuring the power of internal combustion engines specified in Regulation No 120 Revision 2 of the Economic Commission for Europe of the United Nations (UNECE) – Uniform provisions concerning the approval of internal combustion engines to be installed in agricultural and forestry tractors and in non-road mobile machinery, with regard to the measurement of the net power, net torque and specific fuel consumption (OJ L 166, 30.6.2015, p. 170).

▼M4

Manufacturers or their authorised representatives in the Union shall record the speed or velocity of the equipment during the measurement and state that speed or velocity in the test report.

Where the equipment is fitted with several engines or aggregates, those engines or aggregates shall work simultaneously during the measurements, unless that is not possible, in which case manufactures shall measure noise of each possible combination of engines or aggregates.

Manufacturers or their authorised representatives in the Union shall lay down specific operating conditions for each type of equipment under load. The specific operating conditions shall, as much as possible, produce effects and stresses similar to those encountered under actual working conditions.

1.4. **Test of hand-operated equipment**

Manufacturers or their authorised representatives in the Union shall lay down conventional operating conditions for each type of hand-operated equipment that produce effects and stresses similar to those undergone under actual working conditions.

2. DETERMINATION OF THE SURFACE SOUND PRESSURE LEVEL

Manufacturers or their authorised representatives in the Union shall determine the surface sound pressure level at least three times. If at least two of the determined values do not differ by more than 1 dB, further measurements will not be necessary. Where that is not the case, manufacturers or their authorised representatives in the Union shall continue the measurements until they obtain two values that differ by no more than 1 dB. The A-weighted surface sound pressure level that manufacturers or their authorised representatives in the Union are to use for calculating the sound power level shall be the arithmetic mean of the two highest values that do not differ by more than 1 dB.

Where possible, manufacturers or their authorised representatives in the Union shall take the noise measurements at all the microphone positions simultaneously. This is especially important for dynamic tests. Where that is not possible, manufacturers or their authorised representatives in the Union shall take special care to ensure stable conditions in the test environment and to minimise the risks of including undesired variations in the noise emitted by the machine or by any other factors, including background noise and wind speed.

3. INFORMATION TO BE REPORTED

The test report, which is required within the technical documentation provided for in Annex V point 3, Annex VI point 3, Annex VII point 2 and Annex VIII points 3.1 and 3.3, shall contain the technical data necessary to identify the noise source under test, the noise test code and the acoustical data used for and obtained during the test.

The value of the A-weighted sound power level of the noise source under test that is to be reported shall be rounded to the nearest whole number (less than 0,5 use the lower whole number; if it is greater than or equal to 0,5 use the higher whole number).

▼M4

Where, for the reasons and under the conditions stipulated in the last paragraph of the introduction of this Annex, manufacturers or their authorised representatives in the Union use the methods laid down in the version of Annex III that was applicable before 22 May 2025 to determine the sound power level, manufacturers or their authorised representatives in the Union shall keep record in the test report of the data relative to the measurements performed in accordance with both methods: the methods laid down in the version of Annex III that was applicable before 22 May 2025 and the methods laid down in this Annex.

The relevant national authorities and notified bodies shall accept for models of equipment, the first item of which was placed on the market or put into service before 22 May 2025, the technical reports of noise measurements performed in accordance with the methods laid down in the version of Annex III that was applicable before 22 May 2025, for the purposes of the conformity assessment under the procedures referred to in Article 14(1) of this Directive and for the purposes of requirements regarding the technical documentation for such products as provided for in Annex V point 3, Annex VI point 3, Annex VII point 2, Annex VIII points 3.1 and 3.3 of this Directive until 22 May 2028.

4. ENVIRONMENTAL CORRECTION K_{2A}

Manufacturers or their authorised representatives in the Union shall determine the environmental correction K_{2A} in accordance with EN ISO 3744:2010, Section 4.3.

If $K_{2A} \leq 0{,}5$ dB, it can be neglected.

If $K_{2A} > 4$ dB, the test environment does not comply with the requirements of this Directive and shall be modified.

Manufacturers or their authorised representatives in the Union shall use the specifications for the environmental correction laid down in the noise test code for specific equipment referred to in Part B of this Annex where such specifications exist.

▼M4

PART B

NOISE TEST CODES FOR SPECIFIC EQUIPMENT

0. EQUIPMENT THAT IS TESTED FREE OF LOAD

Test area

Reflecting surface of concrete or non-porous asphalt

Environmental correction K_{2A}

$K_{2A} = 0$

Measurement surface/number of microphone positions/measuring distance:

(a) If the largest dimension of the reference parallelepiped does not exceed 8 m:

hemisphere/six microphone positions in accordance with EN ISO 3744:2010, Annex F.

(b) If the largest dimension of the reference parallelepiped exceeds 8 m: parallelepiped in accordance with ISO 3744:2010 with measurement distance

$d = 1$ m.

Test free of load

The noise tests shall be carried out in accordance with Part A of this Annex, item 1.2

Period(s) of observation/determination of resulting sound power level if more than one operating condition is used

The period of observation shall be at least 15 s or at least 3 operation cycles of the machine.

1. AERIAL ACCESS PLATFORMS WITH COMBUSTION ENGINE

EN 280-1:2022, clause 4.12.2.

2. BRUSH CUTTERS

EN ISO 22868:2021

3. BUILDERS' HOISTS FOR THE TRANSPORT OF GOODS

See No 0.

The geometrical centre of the engine shall be positioned above the centre of the hemisphere. The lift shall move without load and leave the hemisphere – if necessary – in direction of point 1.

4. BUILDING SITE BAND SAW MACHINES

EN ISO 19085-16:2021, clause 6.2.2.

The measurement method of this standard based on EN ISO 3744:2010 shall be applied.

5. BUILDING SITE CIRCULAR SAW BENCHES

Measurement surface/number of microphone positions/measuring distance

ISO 7960:1995, Annex A, measurement distance $d = 1$ m.

Test under load

ISO 7960:1995, Annex A (point A2(b) only).

Period of observation

ISO 7960:1995, Annex A.

6. CHAIN SAWS, PORTABLE

(a) **Combustion-engine driven equipment**

EN ISO 22868:2021

▼M4

(b) **Electric-motor operated equipment**

EN 62841-4-1:2020, Annex I

7. COMBINED HIGH PRESSURE FLUSHERS AND SUCTION VEHICLES

Where both devices can be operated simultaneously, they shall be operated in accordance with Nos 26 and 52 of this Part B. If not, the noise emissions of both devices shall be measured separately and the higher values shall be retained.

8. COMPACTION MACHINES

(a) **Vibratory plates and vibratory rammers**

EN 500-4: 2011, clause 5.10.1

(b) **Rollers**

EN 474-13:2022, clause 4.6

9. COMPRESSORS

EN ISO 2151:2008

The period of observation shall be at least 15 s.

10. CONCRETE-BREAKERS AND PICKS, HAND HELD

(a) **Combustion-engine driven equipment**

Measurement surface/number of microphone positions/measuring distance

Hemisphere/six microphone positions in accordance with EN ISO 3744:2010, Annex F and the following table, depending on the mass of equipment as given in the following table:

Mass of equipment m (in kg)	Radius of hemi-sphere (in m)	z for microphone positions 2, 4, 6 and 8 (in m)
$m < 10$	2	0,75
$m \geq 10$	4	1,50

Mounting of equipment

All appliances shall be tested in the vertical position.

If the test appliance has got an air exhaust, its axis shall be equidistant from two microphone positions. The noise of the power supply shall not influence the measurement of the noise emission from the tested appliance.

Support of the appliance

The appliance shall be coupled during the test run to a tool embedded in a cube-shaped concrete block placed in a concrete pit, sunk into the ground.

An intermediate steel piece may be inserted during tests between the appliance and the support tool. This intermediate piece shall form a stable structure between the appliance and the support tool. Figure 10.1 incorporates those requirements.

Block characteristics

The block shall take the shape of a cube of 0,60 m ± 2 mm long at the edge and as regular as possible. It shall be made of reinforced concrete and thoroughly vibrated in layers of up to 0,20 m to avoid excessive sedimentation.

Quality of the concrete

The quality of the concrete shall correspond to C 50/60 of EN 206:2013+A2:2021.

The cube shall be reinforced by 8 mm-diameter steel rods without ties, each rod being independent of the other. The design concept is illustrated in figure 10.2.

▼M4

Supporting tool

The tool shall be sealed into the block and shall consist of a rammer between 178 mm and 220 mm diameter and a tool chuck component identical to that normally used with the appliance being tested and complying with ISO 1180:1983/Add 1:1985, but sufficiently long to enable the practical test to be carried out.

Suitable treatment shall be carried out to integrate the two components. The tool shall be fixed in the block so that the bottom of the rammer is 0,30 m from the upper face of the block (see Figure 10.2).

The block shall remain mechanically sound, particularly at the point where the supporting tool and the concrete meet. Before and after each test, it shall be verified that the tool sealed in the concrete block is integrated into it.

Positioning of the cube

The cube shall be set in a pit cemented throughout, covered by a screening slab of at least 100 kg/m^2, as indicated in figure 10.3, so that the upper surface of the screening slab is flush with the ground. To avoid any parasitic noise, the block shall be insulated against the bottom and sides of the pit by elastic blocks, the cut-off frequency of which shall not be more than half the striking rate of the appliance tested, expressed as strokes per second.

The opening in the screening slab through which the tool chuck component passes shall be as small as possible and sealed by a flexible sound-proof joint.

Test under load

The appliance tested shall be connected to the supporting tool.

The test appliance shall be operated in stable conditions having the same acoustical stability as in normal service.

The test appliance shall be operated at the maximum power specified in the instructions supplied to the purchaser.

Period of observation

The period of observation shall be at least 15 s.

Figure 10.1

Schematic diagram of the intermediate piece

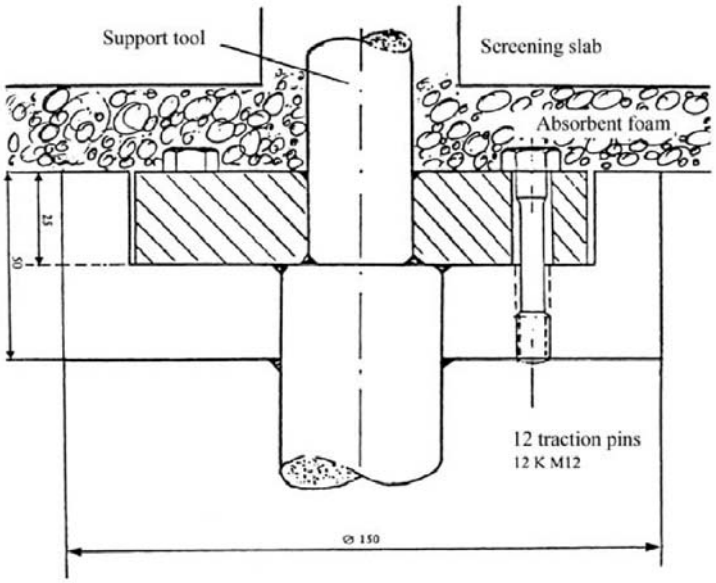

▼M4

Figure 10.2

Test block

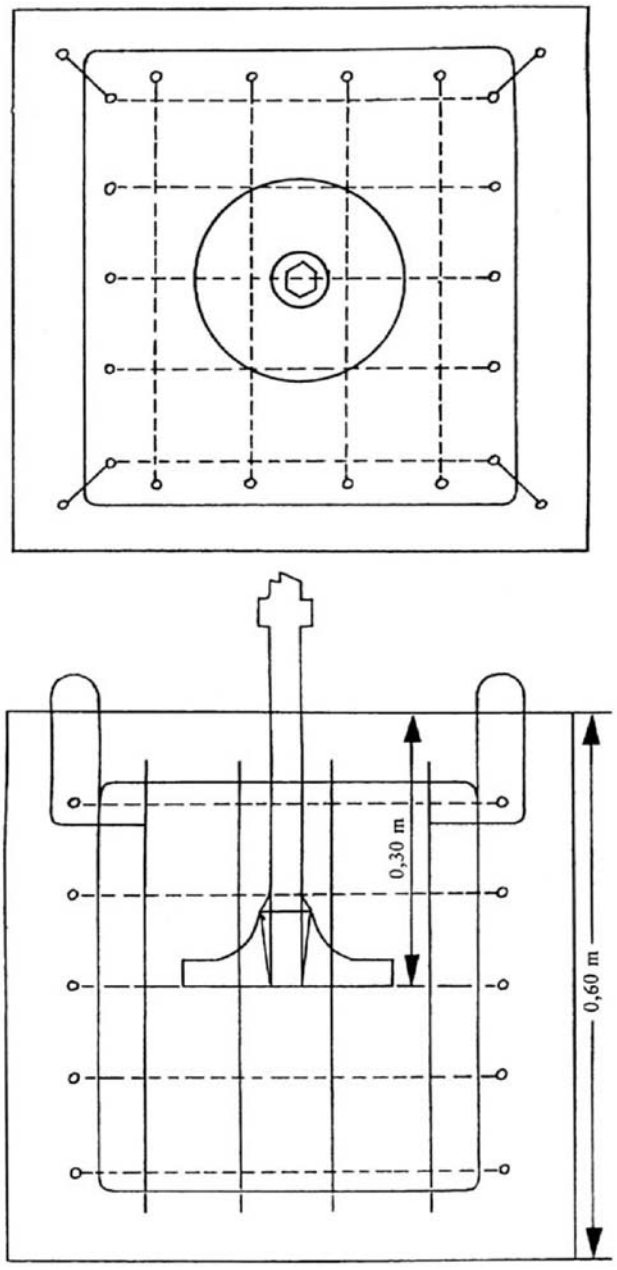

▼M4

Figure 10.3

Testing device

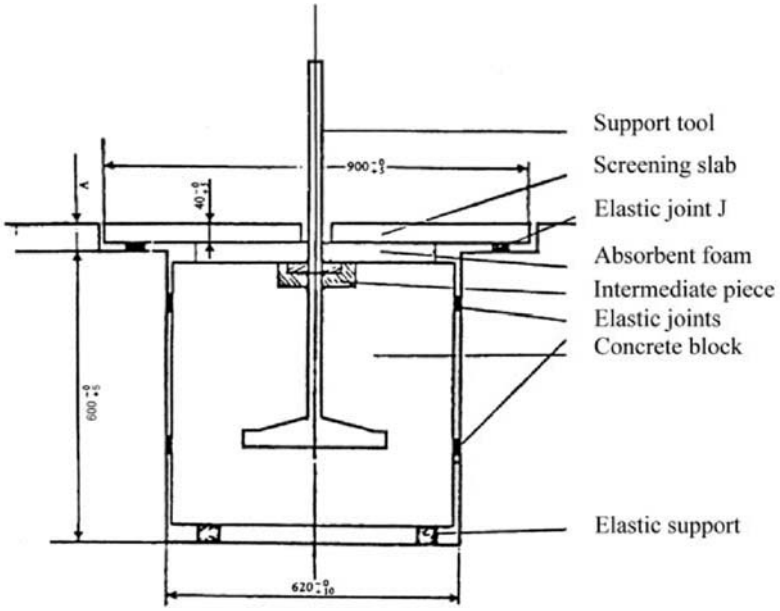

The value of A shall be such that the screening slab resting on the elastic joint J is flush with the ground.

(b) **Electric-motor operated equipment**

EN IEC 62841-2-6:2020, EN IEC 62841-2-6:2020/A11:2020, Annex I, clause I.2

(c) **Pneumatic or hydraulic driven equipment**

Same as combustion-engine driven equipment.

11. CONCRETE OR MORTAR MIXERS

Test under load

The mixing device (drum) shall be filled to its rated capacity with sand of granulation 0 to 3 mm, the humidity shall be 4 to 10 %.

The mixing device shall be operated at least at the rated speed.

Period of observation

The period of observation shall be at least 15 s.

12. CONSTRUCTION WINCHES

(a) **Combustion-engine driven equipment**

See No 0.

The geometrical centre of the engine shall be positioned above the centre of the hemisphere; the winch shall be connected but no load shall be applied.

(b) **Electric-motor operated equipment**

EN 14492-2:2019, Annex M.

13. CONVEYING AND SPRAYING MACHINES FOR CONCRETE AND MORTAR

EN 12001:2012, Annex C

▼M4

14. CONVEYOR BELTS

See No 0.

The geometrical centre of the engine shall be positioned above the centre of the hemisphere. The belt shall move without load and leave the hemisphere, if necessary, in the direction of point 1.

15. COOLING EQUIPMENT ON VEHICLES

Test under load

The cooling equipment shall be installed in a real or simulated cargo space and the sound level shall be measured in a stationary position where, according to the instructions supplied to the purchaser, the height of the cooling equipment is representative of the intended installation requirements. The power source of the cooling equipment shall operate at the rate that causes the maximum speed of the cooling compressor and the fan specified in the instructions. If the cooling equipment is intended to be powered by the driving engine of the vehicle, the engine shall not be used during the measurement and the cooling equipment shall be connected to a suitable electrical power source. Removable tractor units shall be removed during the measurement.

The sound level of cooling equipment installed in cargo-space refrigeration units which have a choice of different power sources shall be measured separately for each power source. The measurement results reported shall as a minimum reflect the mode of operation which leads to the maximum noise output.

Period of observation

The period of observation shall be at least 15 s.

16. DOZERS

ISO 6395:2008 with the operating and testing conditions set out in Annex C of that standard.

17. DRILL RIGS

(a) **Mobile drill rigs**

EN 16228-2:2014+A1:2021, clause 5.12

(b) **Horizontal directional drilling equipment**

EN 16228-3:2014+A1:2021, clause 5.15

(c) **Interchangeable auxiliary equipment for drilling**

EN 16228-7:2014+A1:2021, clause 5.3

(d) **Any other equipment for drilling**

EN 16228-1:2014+A1:2021, clause 5.27.2.2

18. DUMPERS

ISO 6395:2008 with the operating and testing conditions set out in Annex F of that standard.

19. EQUIPMENT FOR LOADING AND UNLOADING TANKS OR SILOS ON TRUCKS

See No 9 for compressors or vacuum pumps.

See No 56 for liquid pumps.

20. EXCAVATORS

ISO 6395:2008 with the operating and testing conditions set out in Annex B of that standard.

21. EXCAVATORS-LOADERS

ISO 6395:2008 with the operating and testing conditions set out in Annex E of that standard.

▼M4

22. GLASS RECYCLING CONTAINERS

For the purposes of this noise test code, the single-event time-integrated sound pressure level L_E, as defined in EN ISO 3744:2010 point 3.4, shall be used in measuring the sound pressure level at the microphone positions.

Environmental correction K_{2A}

Measurement in the open air

$K_{2A} = 0$

Measurements indoors

The value of the constant K_{2A}, determined in accordance with EN ISO 3744:2010, Annex A, shall be $\leq$ 2,0 dB in which case K_{2A} shall be disregarded.

Operating conditions during test

The noise measurement shall be carried out during a complete cycle beginning with the empty container and completed when 120 glass bottles have been thrown into the container.

The glass bottles are defined as follows:

— capacity: 75 cl;

— mass: 370 ± 30 g.

The testing operator shall hold each glass bottle by its neck and with its bottom towards the filling aperture and then push it gently inside through the filling aperture in the direction of the centre of the container, avoiding if possible that the bottle hits the walls. Only one filling aperture, which is the one nearest to microphone position 12, shall be used for throwing the bottles.

Period(s) of observation/determination of resulting sound power level if more than one operating condition is used

The A-weighted single-event time-integrated sound pressure level shall be simultaneously measured at the six microphone positions for each glass bottle thrown into the container.

The A-weighted single-event time-integrated sound power level averaged over the measurement surface shall be calculated in accordance with EN ISO 3744:2010, point 8.2.2.

The A-weighted single-event time-integrated sound pressure level averaged over all 120 throwings of glass bottles shall be calculated as the logarithmic mean of the A- weighted single-event time-integrated sound pressure levels, averaged over the measurement surface.

23. GRADERS

ISO 6395:2008 with the operating and testing conditions set out in Annex G of that standard.

24. GRASS TRIMMERS/GRASS EDGE TRIMMERS

See No 2.

25. HEDGE TRIMMERS

(a) **Combustion-engine driven equipment**

EN ISO 22868:2021

(b) **Electric-motor operated equipment**

EN IEC 62841-4-2:2019, Annex I, clause I.2

▼M4

26. HIGH-PRESSURE FLUSHERS

Test under load

The high-pressure flusher shall be tested in a stationary position. The engine and auxiliary units shall operate at the speed provided by the manufacturer for the operation of the working equipment. The high-pressure pumps shall be operated at the maximum speed and operating pressure provided by the manufacturer. Using an adapted nozzle, the pressure reduction valve shall be just on the point of reacting. The flow noise of the nozzle shall not have any influence on the results of the measurements.

Period of observation

The period of observation shall be at least 30 s.

27. HIGH-PRESSURE WATER JET MACHINES

(a) **Equipment with pressure rating ≤ 35 MPa**

EN 60335-2-79:2012, Annex CC

(b) **Equipment with pressure rating > 35 MPa**

EN 1829-1:2010, clause 6.8

28. HYDRAULIC HAMMERS

Measurement surface/number of microphone positions/measuring distance

Hemisphere/six microphone positions in accordance with EN ISO 3744:2010, Annex F/r = 10 m.

Mounting of the equipment

For the test the hammer shall be attached to a carrier and a special test block structure shall be used. Figure 28.1 gives the characteristics of this structure and Figure 28.2 shows the position of the carrier.

Carrier

The carrier for the test hammer shall meet the requirements of the test hammer's technical specifications especially in weight range, hydraulic output power, supply oil flow and return line back pressure.

Mounting

Mechanical mounting as well as connections (hoses, pipes, etc.) shall correspond to specifications given in the hammer's technical data. All significant noise caused by pipes and various mechanical components needed for installation, shall be eliminated. All component connections shall be well tightened.

Hammer stability and static hold force

The hammer shall be firmly held down by the carrier to give the same stability as that existing under normal operating conditions. The hammer shall be operated in an upright position.

Tool

A blunt tool shall be used in the measurements. The length of the tool shall meet the requirements referred to in Figure 28.1 (test block).

Test under load

Hydraulic input power and oil flow

Operating conditions of the hydraulic hammer shall be appropriately adjusted, measured and reported along with the corresponding technical specification values. The hammer under test shall be used in such way that 90 % or more of the maximum hydraulic input power and oil flow of the hammer can be reached

▼M4

Care shall be taken that the total uncertainty of the measurement chains of p_s and Q is kept within ± 5 %, in order to ensure the hydraulic input power determination within ± 10 % accuracy. Assuming linear correlation between hydraulic input power and emitted sound power, that would mean a variation of less than ± 0,4 dB in the determination of the sound power level.

Adjustable components having effect on the hammer power

Pre-settings of all accumulators, pressure central valves and other possible adjustable components shall meet the values given in technical data. If more than one fixed impact rate is optional, measurements shall be made using all settings. Minimum and maximum values shall be presented.

Quantities to be measured

p_s The mean value of the hydraulic supply fine pressure during the hammer's operation, including at least 10 blows.

Q The mean value of the breaker inlet oil flow measured simultaneously with p_s.

T The oil temperature shall lie between + 40/ + 60 °C during measurements. The temperature of the hydraulic breaker body shall be stabilised to normal operating temperature before starting the measurements.

P_a The prefill gas pressures of all accumulators shall be measured in a static situation (breaker not operating) at stable ambient temperature of + 15/ + 25 °C. The measured ambient temperature shall be recorded with the measured accumulator prefill gas pressure.

Parameters to be evaluated from the measured operating parameters

PIN Hydraulic input power of the breaker, PIN = p_s Q

Hydraulic supply line pressure measurement, p_s:

— p_s shall be measured as close to the breaker IN-port as possible;

— p_s shall be measured with a pressure gauge (minimum diameter: 100 mm; accuracy class ± 1,0 % FSO).

Breaker inlet oil flow, Q:

— Q shall be measured from the supply pressure line as close to the breaker IN-port as possible;

— Q shall be measured with an electric flowmeter (accuracy class ± 2,5 % of the flow reading).

Measuring point of the oil temperature, T:

— T shall be measured from the oil tank of the carrier or from the hydraulic line connected to hammer. The measuring point shall be specified in the report;

— The accuracy of the temperature reading shall lie within ± 2 °C of the actual value.

Period of observation/determination of resulting sound power level

The period of observation shall be at least 15 s.

The measurements shall be repeated three times, or more if necessary. The final result shall be calculated as the arithmetic mean of the two highest values that do not differ by more than 1 dB.

▼**M4**

Figure 28.1

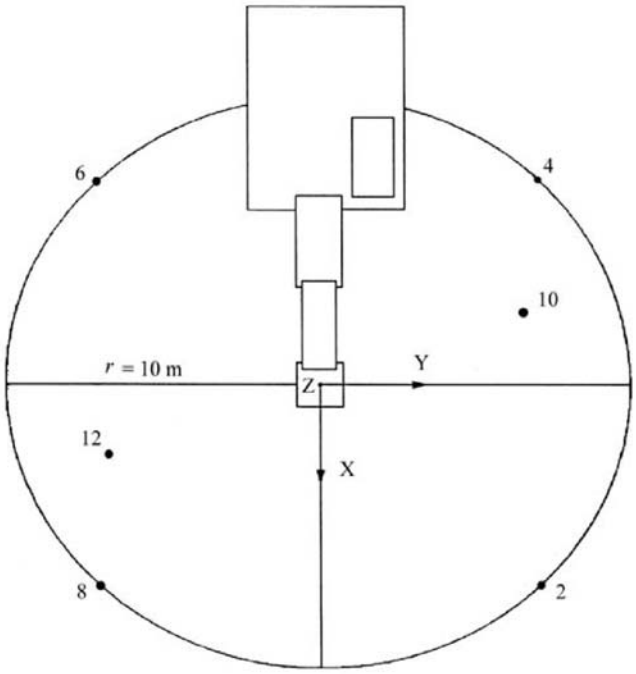

Figure 28.2

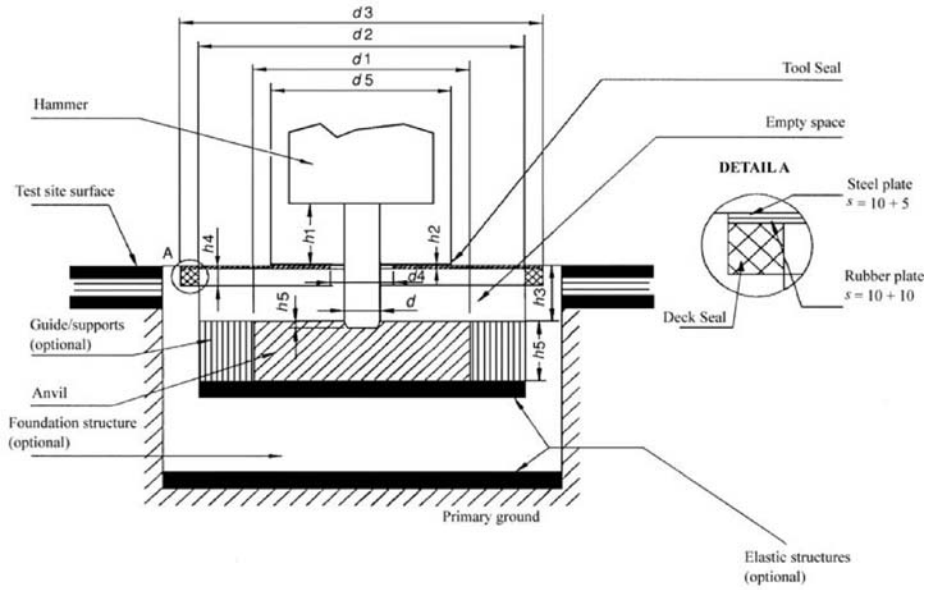

Definitions

d Tool diameter (mm);

d1 Anvil diameter, 1 200 ± 100 mm;

d2 Inner diameter of the anvil support structure, ≤ 1 800 mm;

d3 Diameter of the test block deck, ≤ 2 200 mm;

d4 Diameter of the tool opening in the deck, ≤ 350 mm;

d5 Diameter of the tool seal, ≤ 1 000 mm;

▼M4

h1 Visible tool length between the lowest part of the housing and tool seal upper surface (mm), h1 = d ± d/2;

h2 Tool seal thickness above the deck, ≤ 20 mm (if the tool seal is located below the deck, its thickness shall not be limited; it may be made of foam rubber);

h3 Distance between deck upper surface and anvil upper surface, 250 ± 50 mm;

h4 Isolating foam rubber deck seal thickness, ≤ 30 mm;

h5 Anvil thickness, 350 ± 50 mm;

h6 Tool penetration, ≤ 50 mm.

If the quadratic shape of the test block structure is used, the maximum length dimension shall equal 0,89 × corresponding diameter.

The empty space between the deck and the anvil may be filled with elastic foam rubber or other absorption material, density < 220 kg/m^3.

29. HYDRAULIC POWER PACKS

Mounting of equipment

The hydraulic power pack shall be installed on the reflecting plane; skid-mounted hydraulic power packs shall be placed on a support 0,40 m high, unless otherwise required by the manufacturer's conditions of installation.

Test under load

During testing, no tools shall be coupled to the hydraulic power pack.

The hydraulic power pack shall be brought to its steady state within the range specified by the manufacturer. It shall operate at its nominal speed and its nominal pressure. The nominal speed and pressure shall be those appearing in the instructions supplied to the purchaser.

Period of observation

The period of observation shall be at least 15 s.

30. JOINT CUTTERS

(a) **Pedestrian-controlled floor-sawing machines**

EN 13862:2021, clause 4.10.2

(b) **Portable, hand-held internal combustion engine-driven equipment, mounted on a mobile support, to be used as floor saws**

EN ISO 19432-1:2020, clause 4.19.2

(c) **Other joint cutters**

Test under load

The joint cutter shall be equipped with the largest possible blade specified by the manufacturer in the instructions supplied to the purchaser. The engine shall operate at its maximum speed with the blade idling.

Period of observation

The period of observation shall be at least 15 s.

▼M4

31. LANDFILL COMPACTORS

ISO 6395:2008 with the operating and testing conditions set out in Annex H of that standard.

32. LAWNMOWERS

(a) **Combustion engine powered rotatory and cylinder lawnmowers**

EN ISO 5395-1:2013, EN ISO 5395-1:2013/A1:2018, clause 4.3, second indent.

Environmental correction K_{2A}

If $K_{2A} \leq 0{,}5$ dB, it can be neglected.

(b) **Electric-motor operated rotatory and cylinder stand-on, ride-on, and pedestrian controlled lawnmowers**

EN IEC 62841-4-3:2021, EN IEC 62841-4-3:2021/A11:2021, Annex I, clause I.2

33. LAWN TRIMMERS/LAWN EDGE TRIMMERS

EN 50636-2-91:2014, Annex CC

34. LEAF BLOWERS

(a) **Combustion-engine driven equipment**

EN ISO 22868:2021

(b) **Electric-motor operated equipment**

EN 50636-2-100:2014, Annex CC

35. LEAF COLLECTORS

See No 34.

36. LIFT TRUCKS

EN 12053:2001+A1:2008

37. LOADERS

ISO 6395:2008 with the operating and testing conditions set out in Annex D of that standard.

38. MOBILE CRANES

EN 13000:2010+A1:2014, clause 5.3

39. MOBILE WASTE CONTAINERS

Test area

— Reflecting surface of concrete or non-porous asphalt

— Laboratory room which provides a free field over a reflecting plane

Environmental correction K_{2A}

Measurement in the open air:

$K_{2A} = 0$

Measurement indoors:

The value of the constant K_{2A}, determined in accordance with EN ISO 3744:2010, Annex A, shall be $\leq 2{,}0$ dB, in which case K_{2A} shall be disregarded.

Measurement surface/number of microphone positions/measuring distance

Hemisphere/six microphone positions in accordance with EN ISO 3744:2010, Annex F/r = 3 m.

Operating conditions during test

All the measurements shall be carried out with an empty container.

▼M4

Test No 1: Free shutting down of the lid along the container body

To minimise the operator's influence on the measurements, the operator shall stand at the back side of the container (hinge side). The lid shall be released by its middle, to prevent warping during its fall.

The measurement shall carried out during the following cycle, repeated 20 times:

— initially, the lid shall be raised vertically;

— the lid shall be released forward, if possible without giving an impulse, with the operator at the back of the container, unmoving until the lid is shut;

— after complete shutting, the lid shall be raised to its initial position.

Note: If necessary, the operator may temporarily move to raise the lid.

Test No 2: Complete opening of the lid

To minimise the operator's influence on the measurements, the operator shall stand at the back side of the container (hinge side) for the four-wheel containers, or on the right side of the container (between microphone position 10 and microphone position 12) for the two-wheel containers. The lid shall be released by its middle or as near as possible to its middle.

To prevent any moving of the container, wheels shall be locked during the test. For the two-wheel containers, and to prevent any bounce of the container, the operator may maintain it by placing a hand on the top rim.

The measurement shall be carried out during the following cycle:

— initially, the lid shall be opened horizontally;

— the lid shall be released without giving an impulse;

— after complete opening, and before a possible rebound, the lid shall be raised to its initial position.

Test No 3: Rolling of the container over an artificial irregular track

For this test, an artificial test track, simulating irregular ground, shall be used. This test track shall consist of two parallel strips of steel mesh (6 m long and 400 mm wide), fastened in the reflecting plane approximately every 20 cm. The distance between the two strips shall adapted to the type of container to allow the wheels to roll all over the whole length of the track. The mounting conditions shall ensure a flat surface. If necessary, the track shall be fastened on the ground with resilient material to avoid emission of parasitic noise.

Note: Every strip may be composed of several 400 mm wide elements fitted together.

An example of adequate track is given in figures 39.1 and 39.2. The operator shall be situated at the lid hinge side.

The measurement shall be carried out while the operator draws the container along the artificial track, with a constant speed of approximately 1 m/s, between points A and B (4,24 m distance – see Figure 39.3) when the wheel axle, for a 2-wheel container, or the first wheel axle for a 4-wheel container, reaches point A or point B. This procedure shall be repeated three times in each direction.

▼M4

During the test, for a 2-wheel container, the angle between the container and the track shall be 45°. For a 4-wheel container, the operator shall ensure an appropriate contact of all the wheels with the track.

Periods of observation/determination of resulting sound power level if more than one operating condition is used

Test Nos 1 and 2: Free shutting down of the lid along the container body and complete opening of the lid

If possible, the measurements shall be carried out simultaneously at the six microphone positions. Otherwise, the sound levels measured at each microphone position shall be classified in increasing order and the sound power levels shall be calculated by associating the values at each microphone position according to their row.

The A-weighted single-event time-integrated sound pressure level shall be measured for each of the 20 shuttings and the 20 openings of the lid at each measurement point. The sound power levels $L_{WAshutting}$ and $L_{WAopening}$ shall be calculated from the quadratic mean of the five highest values among those obtained.

Test No 3: Rolling the container over an artificial irregular track

The period of observation T shall be equal to the duration necessary to cover the distance between point A and point B on the track.

The sound power level $L_{WArolling}$ shall be equal to the mean of six values differing by less than 2 dB. If this criterion is not fulfilled with six measurements, the cycle shall be repeated as often as necessary.

The resulting sound power level shall calculated as follows:

$$L_{WA} = 10 \log 1/3 \left(10^{0,1\ LWAshutting} + 10^{0,1\ LWAopening} + 10^{0,1\ LWArolling}\right)$$

Figure 39.1

Drawing of the rolling track

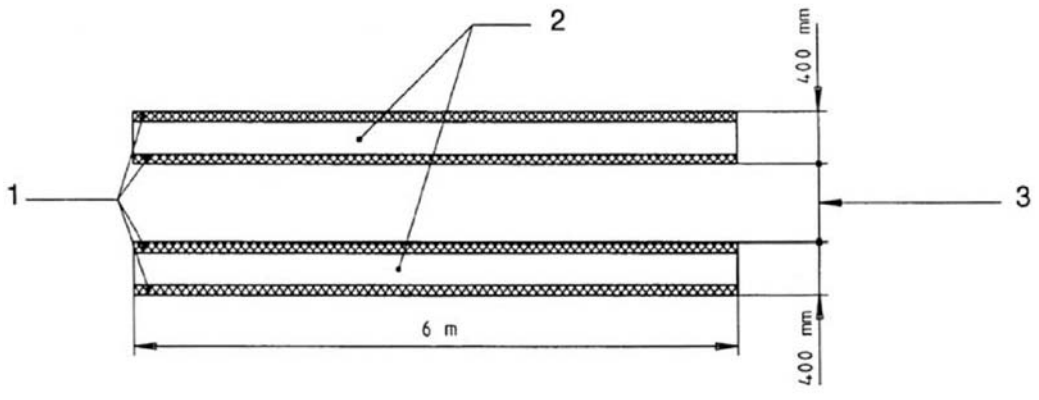

1 Wooden wire mesh cleat
2 Rolling parts
3 Adapted to the container

▼M4

Figure 39.2

Detail of construction and mounting of the rolling track

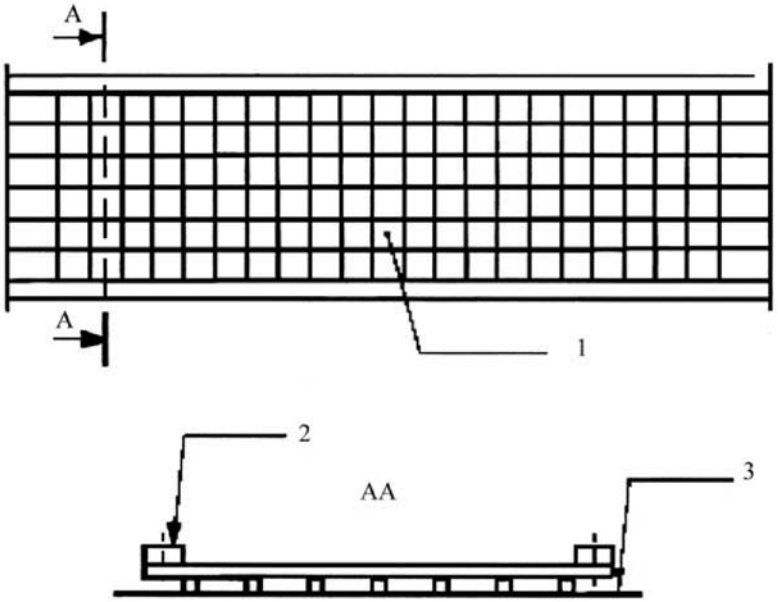

1. — Rigid steel thread (4 mm)
— Mesh of net: (50 mm x 50 mm)
2. Wooden wire mesh cleat (20 mm x 25 mm)
3. Reflecting plane

Figure 39.3

Measurement distance

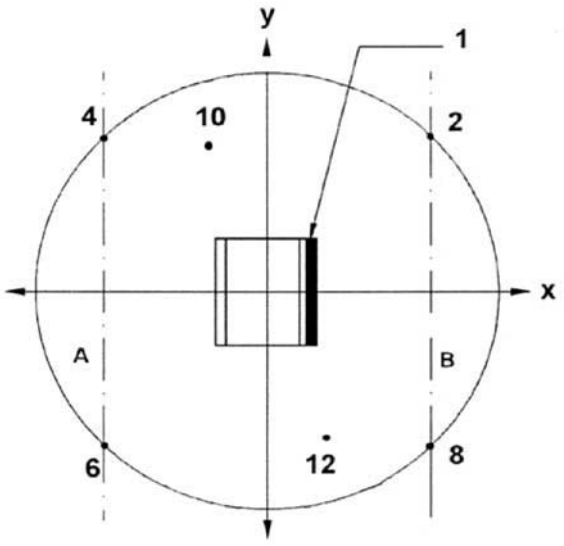

1 Hinge

40. MOTOR HOES

See No 32

The tool shall be disconnected or removed during measurement.

▼M4

41. PAVER-FINISHERS

EN 500-6:2006+A1:2008, clause 5.17

42. PILING EQUIPMENT

(a) **Foundation equipment**

EN 16228-4:2014+A1:2021, clause 5.8

(b) **Interchangeable auxiliary equipment for piling**

EN 16228-7:2014+A1:2021, clause 5.3

(c) **Any other equipment for piling**

EN 16228-1:2014+A1:2021, clause 5.27.2.2

43. PIPELAYERS

ISO 6393:2008

44. PISTE CATERPILLARS

ISO 6393:2008, with the same procedures and operating conditions described for tractor-dozers. The test site surface shall be the hard reflecting plane (5.3.2. in ISO 6393:2008).

45. POWER GENERATORS

EN ISO 8528-10:2022

The measurement method of this standard based on EN ISO 3744:2010 shall be applied.

46. POWER SWEEPERS

(a) **Road sweepers**

EN 17106-2:2021, clause 4.3

(b) **Other power sweepers for use out-doors**

EN 60335-2-72:2012, Annex DD

47. REFUSE COLLECTION VEHICLES

EN 1501-4:2023

48. ROAD MILLING MACHINES

EN 500-2:2006+A1:2008, clause 5.17

49. SCARIFIERS

(a) **Combustion-engine driven equipment**

EN 13684:2018, clause 5.16.2

(b) **Electric-motor operated equipment**

EN IEC 62841-4-7:2022, EN IEC 62841-4-7:2022/A11:2022, Annex I, clause I.2

50. SHREDDERS/CHIPPERS

(a) **Garden hand-fed shredders/chippers**

(i) Combustion-engine driven equipment

EN 13683:2003+A2:2011, clause 5.10.2

EN 13683:2003+A2:2011/AC:2013

(ii) Electric-motor operated equipment

EN 50434:2014, clause 20.107.2

▼M4

(b) **Forestry horizontally hand-fed wood chippers**

EN 13525:2020, clause 5.5

(c) **Forestry vertically hand-fed wood chippers, forestry mechanically (vertically and horizontally) loaded wood chippers and other shredders/chippers**

Test under load

The shredder/chipper shall be tested chipping one or more pieces of wood.

The work-cycle shall consist of chipping a round piece of wood (dry pine or plywood) of at least 1,5 m length, that is sharpened at one end and has a diameter approximately equal to the maximum that the shredder/chipper is designed to accept specified in the instructions supplied to the purchaser.

Period of observation/determination of resulting sound power level

The period of observation shall end when there is no more material in the chipping area, but it shall not exceed 20 s. If both operation conditions are possible, the higher sound power level shall be retained.

51. SNOW-REMOVING MACHINES WITH ROTATING TOOLS

(a) **Road operation snow clearing machines**

EN 17106-3-1:2021, clause 4.2

(b) **Pedestrian-controlled and ride-on snow throwers**

(i) Combustion-engine driven equipment

EN ISO 8437-4:2021, Annex A

(ii) Electric-motor operated equipment:

The machine shall be operated at maximum speed at no-load for 10 min before the test starts. The collector or impeller devices shall be lubricated in accordance with manufacturer's instructions.

During the test, the collector or impeller shall be engaged and unloaded. The test shall be carried out stationary at the maximum speed at no-load.

Machines shall be measured by placing them on the surface in such a way that the projection of the geometrical centre of their main parts (excluding handle, etc.) coincides with the origin of the coordinate system of the microphone positions. If an artificial surface is used, it shall be placed so that its geometrical centre also coincides with the origin of the coordinate system of the microphone positions. The longitudinal axis of the machine shall be on the x-axis. The measurement shall be carried out without an operator.

During measurements, the machine shall operate under stable conditions. Once the noise emission is steady, the measurement time interval shall be at least 15 s. If measurements are made in octave or one-third octave frequency bands, the minimum period of observation shall be 30s for the frequency bands centred on or below 160 Hz, and 15 s for the frequency bands centred on or above 200 Hz.

▼**M4**

52. SUCTION VEHICLES

Test under load

The suction vehicle shall be tested in a stationary position. The engine and auxiliary units shall operate at the speed provided by the manufacturer for the operation of the working equipment. The vacuum pumps shall operate at the maximum speed provided by the manufacturer. The suction equipment shall be operated in such a way that the internal pressure is equal to atmospheric pressure (0 % vacuum). The flow noise of the suction nozzle shall not have any influence on the results of the measurements.

Period of observation

The period of observation shall be at least 15 s.

53. TOWER CRANES

EN 14439:2006+A2:2009, clause 6.4.1

54. TRENCHERS

ISO 6393:2008

55. TRUCK MIXERS

EN 12609:2021, Annex B

56. WATER PUMP UNITS

EN ISO 20361:2019, EN ISO 20361:2019/A11:2020

The measurement method of this standard based on EN ISO 3744:2010 shall be applied.

The period of observation shall be at least 15 s.

57. WELDING GENERATORS

EN ISO 8528-10:2022

The measurement method of this standard based on EN ISO 3744:2010 shall be applied.

▼B

ANNEX IV

MODELS OF THE CE MARKING OF CONFORMITY AND OF THE INDICATION OF THE GUARANTEED SOUND POWER LEVEL

The CE conformity marking must consist of the initials ‘CE’ taking the following form:

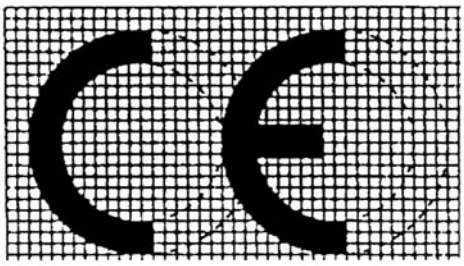

Iff the CE marking is reduced or enlarged according to the size of the equipment the proportions given in the above drawing must be respected. The various components of the CE marking must have substantially the same vertical dimension which may not be less than 5 mm.

The indication of the guaranteed sound power level must consist of the single-number of the guaranteed sound power in dB, the sign L_{WA} and a pictogram taking the following form:

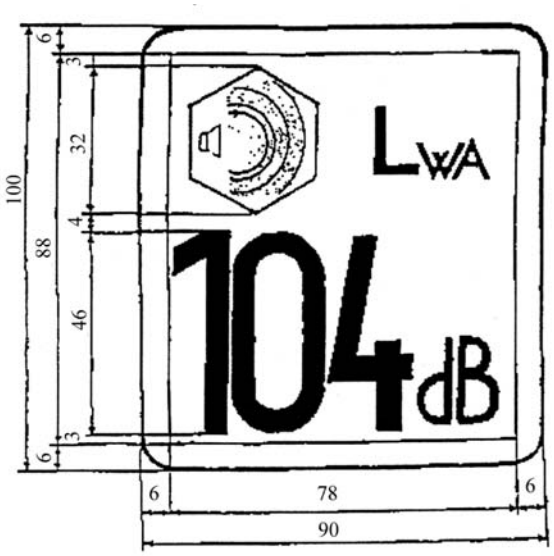

If the indication is reduced or enlarged according to the size of the equipment the proportions given in the above drawing must be respected. However, the vertical dimension of the indication should, if possible, not be less than 40 mm.

▼B

ANNEX V

INTERNAL CONTROL OF PRODUCTION

1. This Annex describes the procedure whereby the manufacturer, or his authorised representative established within the Community, who carries out the obligations laid down in point 2, ensures and declares that the equipment concerned satisfies the requirements of this Directive. The manufacturer, or his authorised representative established in the Community, must affix the CE marking of conformity and the indication of the guaranteed sound power level as required in Article 11 to each piece of equipment and draw up a written EC declaration of conformity as required in Article 8.

2. The manufacturer, or his authorised representative established in the Community, must draw up the technical documentation described in point 3 and he must keep it for a period ending at least 10 years after the last product has been manufactured at the disposal of the relevant national authorities for inspection purposes. The manufacturer, or his authorised representative established in the Community, may entrust another person to keep the technical documentation. In this case he has to include the name and address of this person in the EC declaration of conformity.

3. The technical documentation must enable the conformity of the equipment with the requirements of this Directive to be assessed. It must contain at least the following information:

   — name and address of the manufacturer or his authorised representative established in the Community

   — a description of the equipment

   — make

   — trade name

   — type, series and numbers

   — the technical data relevant for the identification of the equipment and the assessment of its noise emission, including, if appropriate, schematic drawings and any description and explanation necessary for their understanding

   — the reference to this Directive

   — the technical report of noise measurements carried out in accordance with the provisions of this Directive

   — the technical instruments applied and the results of the evaluation of the uncertainties due to production variation and their relation to the guaranteed sound power level.

4. The manufacturer must take all measures necessary in order that the manufacturing process ensures continuing compliance of the manufactured equipment with the technical documentation referred to in points 2 and 3 and with the requirements of this Directive.

▼B

ANNEX VI

INTERNAL CONTROL OF PRODUCTION WITH ASSESSMENT OF TECHNICAL DOCUMENTATION AND PERIODICAL CHECKING

1. This Annex describes the procedure whereby the manufacturer, or his authorised representative established in the Community, who carries out the obligations laid down in points 2, 5 and 6 ensures and declares that the equipment concerned satisfies the requirements of this Directive. The manufacturer, or his authorised representative established in the Community, must affix the CE marking of conformity and the indication of the guaranteed sound power level as required in Article 11 to each piece of equipment and draw up a written EC declaration of conformity as required in Article 8.

2. The manufacturer, or his authorised representative established in the Community, must draw up the technical documentation described in point 3 and he must keep it for a period ending at least 10 years after the last product has been manufactured at the disposal of the relevant national authorities for inspection purposes. The manufacturer, or his authorised representative established in the Community, may entrust another person to keep the technical documentation. In this case he has to include the name and address of this person in the EC declaration of conformity.

3. The technical documentation must enable the conformity of the equipment with the requirements of this Directive to be assessed. It must contain at least the following information:

   — name and address of the manufacturer or his authorised representative established in the Community

   — a description of the equipment

   — make

   — trade name

   — type, series and numbers

   — the technical data relevant for the identification of the equipment and the assessment of its noise emission, including, if appropriate, schematic drawings and any description and explanation necessary for their understanding

   — the reference to this Directive

   — the technical report of noise measurements carried out in accordance with the provisions of this Directive

   — the technical instruments applied and the results of the evaluation of the uncertainties due to production variation and their relation to the guaranteed sound power level.

4. The manufacturer must take all measures necessary in order that the manufacturing process ensures compliance of the manufactured equipment with the technical documentation referred to in points 2 and 3 and with the requirements of this Directive.

5. *Evaluation by the notified body prior to placing on the market*

   The manufacturer, or his authorised representative established in the Community, shall present a copy of his technical documentation to a notified body of his choice before the first item of equipment is placed on the market or put into service.

   If there are doubts about the plausibility of the technical documentation, the notified body shall inform accordingly the manufacturer or his authorised representative established in the Community, and, if need be, carry out, or have carried out modifications to the technical documentation, or possibly, tests deemed necessary.

▼B

After the notified body has issued a report confirming that the technical documentation satisfies the provisions of this Directive, the manufacturer or his authorised representative established within the Community may affix the CE marking to the equipment and issue an EC declaration of conformity in accordance with Articles 11 and 8, for which he will bear complete responsibility.

6. *Evaluation by the notified body during production*

The manufacturer, or his authorised representative established in the Community, shall further involve the notified body in the production phase according to one of the following procedures to be chosen by the manufacturer or his authorised representative established within the Community:

— the notified body shall carry out periodical checks in order to verify continuing compliance of the manufactured equipment with the technical documentation and with the requirements of this Directive; in particular the notified body shall concentrate on:

  — the correct and complete marking of the equipment according to Article 11,

  — issuing of the EC declaration of conformity according to Article 8,

  — the technical instruments applied and the results of the evaluation of the uncertainties due to production variation and their relation to the guaranteed sound power level,

The manufacturer, or his authorised representative established in the Community, shall give the notified body free access to all the internal documentation supporting these procedures, the actual results of the internal audits and the corrective actions which have been taken, if any.

Only if the above checks give unsatisfactory results shall the notified body carry out noise tests, which, on its own judgement and experience, may be simplified or completely carried out according to the provisions laid down in Annex III for the relevant type of equipment,

— the notified body shall carry out or have carried out product checks at random intervals. An adequate sample of the final equipment, chosen by the notified body, must be examined and appropriate noise tests as set out in Annex III, or equivalent tests, must be carried out to check the conformity of the product with the relevant requirements of the Directive. The product checking must include the following aspects:

  — the correct and complete marking of the equipment according to Article 11,

  — issuing of the EC declaration of conformity according to Article 8.

In both procedures, the frequency of the checks shall be defined by the notified body according to the results of previous evaluations, the need to monitor corrective actions and further guidance for the frequency of the checks that may be given by the yearly production and the general reliability of the manufacturer to maintain the guaranteed values; however a check shall be carried out at least once every three years.

If there are doubts about the plausibility of the technical documentation or the adherence during production, the notified body shall inform accordingly the manufacturer, or his authorised representative established in the Community.

In those cases where equipment checked does not conform to the provisions of this Directive, the notified body must inform the notifying Member State.

▼B

ANNEX VII

UNIT VERIFICATION

1. This Annex describes the procedure whereby the manufacturer, or his authorised representative established in the Community, ensures and declares that the equipment which has been issued with the certificate referred to in point 4 conforms to the requirements of this Directive. The manufacturer, or his authorised representative established in the Community, must affix the CE marking supplemented by the information as required in Article 11 to the equipment and draw up the EC declaration of conformity referred to in Article 8.

2. The application for a unit verification must be lodged by the manufacturer or his authorised representative established in the Community with a notified body chosen by him.

   This application must include:

   — the name and address of the manufacturer and, if the application is lodged by the authorised representative, his name and address in addition

   — a written declaration that the same application has not been lodged with any other notified body

   — a technical documentation conforming to the requirements set below:

      — a description of the equipment

      — trade name

      — type, series and numbers

      — the technical data relevant for the identification of the equipment and the assessment of its noise emission, including, if appropriate, schematic drawings and any description and explanation necessary for their understanding

      — the reference to this Directive.

3. The notified body must:

   — examine whether the equipment has been manufactured in conformity with the technical documentation

   — agree with the applicant the location where, in accordance with this Directive, the noise tests will be carried out

   — in accordance with this Directive, carry out or have carried out the necessary noise tests.

4. Where the equipment meets the provisions of this Directive, the notified body must issue a certificate of conformity to the applicant as described in Annex X.

   If the notified body refuses to issue a certificate of conformity, it must state the detailed grounds for the refusal.

5. The manufacturer, or his authorised representative established in the Community, must keep with the technical documentation copies of the certificate of conformity for a period of 10 years from the date on which the equipment is placed on the market.

▼B

ANNEX VIII

FULL QUALITY ASSURANCE

1. This Annex describes the procedure whereby the manufacturer who satisfies the obligations of point 2 ensures and declares that the equipment concerned satisfies the requirements of this Directive. The manufacturer, or his authorised representative established in the Community, must affix the CE marking supplemented by the information as required in Article 11 to each product and draw up the written EC declaration of conformity referred to in Article 8.

2. The manufacturer must operate an approved quality assurance system for design, manufacture and final product inspection and testing as specified in point 3 and shall be subject to surveillance as specified in point 4.

3. Quality assurance system

3.1. The manufacturer must lodge an application for assessment of his quality assurance system with a notified body of his choice.

The application must include:

— all relevant information for the product category envisaged, including technical documentation of all equipment already in phase of design or production that must contain at least the following information:

  — name and address of the manufacturer or his authorised representative established in the Community

  — a description of the equipment

  — make

  — trade name

  — type, series and numbers

  — the technical data relevant for the identification of the equipment and the assessment of its noise emission, including, if appropriate, schematic drawings and any description and explanation necessary for their understanding

  — the reference to this Directive

  — the technical report of noise measurements carried out in accordance with the provisions of this Directive

  — the technical instruments applied and the results of the evaluation of the uncertainties due to production variation and their relation to the guaranteed sound power level

  — a copy of the EC declaration of conformity

— the documentation concerning the quality assurance system.

3.2. The quality assurance system must ensure compliance of the product with the requirements of the Directives that apply to it.

All the elements, requirements and provisions adopted by the manufacturer shall be documented in a systematic and orderly manner in the form of written policies, procedures and instructions. The quality assurance system documentation must permit a common understanding of the quality policies and procedures such as quality programmes, plans, manuals and records.

3.3. It must contain in particular an adequate description of:

— the quality objectives and the organisational structure, responsibilities and powers of the management with regard to design and product quality

— the technical documentation to be drawn up for each product, containing at least the information indicated in point 3.1 for the technical documentations mentioned there

▼B

— the design control and design verification techniques, processes and systematic actions that will be used when designing the products pertaining to the equipment category covered

— the corresponding manufacturing, quality control and quality assurance techniques, processes and systematic actions that will be used

— the examinations and test that will be carried out before, during and after manufacture, and the frequency with which they will be carried out

— the quality records, such as inspection reports and test data, calibration data, qualification reports of the personnel concerned, etc.

— the means to monitor the achievement of the required design and product quality and the effective operation of the quality assurance system.

The notified body must assess the quality assurance system to determine whether it satisfies the requirements referred to in point 3.2. It shall presume conformity with these requirements in respect of quality assurance systems that implement EN ISO 9001.

The auditing team must have at least one member with experience as an assessor in the equipment technology concerned. The assessment procedure must include an assessment visit to the manufacturer's premises.

The decision must be notified to the manufacturer. The notification must contain the conclusion of the examination and the reasoned assessment decision.

3.4. The manufacturer must undertake to fulfil the obligations arising out of the quality assurance system as approved and to maintain it in an adequate and efficient manner.

The manufacturer or his authorised representative established within the Community shall keep the notified body that has approved the quality assurance system informed of any intended updating of the quality assurance system.

The notified body must evaluate the modifications proposed and decide whether the modified quality assurance system will still satisfy the requirements referred to in point 3.2 or whether a reassessment is required.

It must notify its decision to the manufacturer. The notification must contain the conclusions of the examination and the reasoned assessment decision.

4. Surveillance under the responsibility of the notified body

4.1. The purpose of surveillance is to make sure that the manufacturer duly fulfils the obligations arising out of the approved quality assurance system.

4.2. The manufacturer must allow the notified body entrance for inspection purposes to the locations of design, manufacture, inspection and testing, and storage and must provide it with all necessary information, in particular:

— the quality assurance system documentation

— the quality records as foreseen by the design part of the quality assurance system, such as results of analyses, calculations, tests, etc.

— the quality records as foreseen by the manufacturing part of the quality assurance system, such as inspection reports and test data, calibration data, qualification reports of the personnel concerned, etc.

4.3. The notified body shall periodically carry out audits to make sure that the manufacturer maintains and applies the quality assurance system and must provide an audit report to the manufacturer.

4.4. Additionally the notified body may pay unexpected visits to the manufacturer. During such visits the notified body may carry out, or cause to be

▼B

carried out, tests to verify that the quality assurance system is functioning correctly, if necessary. The notified body must provide the manufacturer with a visit report and, if a test has taken place, with a test report.

5. The manufacturer must, for a period ending at least 10 years after the last equipment has been manufactured, keep at the disposal of the national authorities:

   — the documentation referred to in the second indent of point 3.1 of this Annex

   — the updating referred to in the second paragraph of point 3.4

   — the decisions and reports from the notified body which are referred to in the final paragraph of point 3.4, points 4.3 and 4.4.

6. Each notified body must give the other notified bodies the relevant information concerning the quality assurance system approvals issued and withdrawn.

▼B

ANNEX IX

MINIMUM CRITERIA TO BE TAKEN INTO ACCOUNT BY MEMBER STATES FOR THE NOTIFICATION OF BODIES

1. The body, its director and its staff responsible for carrying out verification operations may be neither the designer, builder, supplier or installer of the equipment nor the authorised representative of any of those parties. They may become involved neither directly nor as authorised representatives in the design, construction, marketing or maintenance of such equipment nor represent the parties engaged in these activities. This does not preclude the possibility of exchange of technical information between the manufacturer and the body.

2. The body and its staff must carry out the assessments and verifications with the highest degree of professional integrity and technical competence and must be free from all pressures and inducements, particularly financial, which might influence their judgement or the results of their work, especially from persons or groups of persons with an interest in the results of verification.

3. The body must have at its disposal the necessary staff and possess the necessary facilities to enable it to perform properly the technical and administrative tasks connected with inspection and surveillance operations; it must also have access to the equipment required for any special verification.

4. The staff responsible for inspection must have;

   — sound technical and professional training

   — satisfactory knowledge of the requirements for the assessment of technical documentation

   — satisfactory knowledge of the requirements for the tests they carry out and adequate practical experience of such tests

   — the ability to draw up the certificates, records and reports required to authenticate the performance of the tests.

5. The impartiality of inspection staff must be guaranteed. Their remuneration must not depend on the number of tests carried out or the results of such tests.

6. The body must take out liability insurance unless its liability is assumed by the State in accordance with national law, or the Member State itself is directly responsible for the tests.

7. The staff of the body must observe professional secrecy with regard to all information gained in carrying out its tests (except *vis-à-vis* the competent administrative authorities of the State in which its activities are carried out) under this Directive or any provisions of national law giving effect to it.

▼B

ANNEX X

UNIT VERIFICATION

MODEL OF CONFORMITY CERTIFICATE

<table>
<tr><td colspan="2">EC CONFORMITY CERTIFICATE</td></tr>
<tr><td>1. MANUFACTURER</td><td>2. EC CONFORMITY CERTIFICATE No</td></tr>
<tr><td>3. CERTIFICATE HOLDER</td><td>4. ISSUING DIRECTIVE APPLICABLE</td></tr>
<tr><td>5. LABORATORY REPORT

No Date:

Measured sound power level:

..... dB</td><td>6. EC DIRECTIVE APPLICABLE

.../.../EC</td></tr>
<tr><td colspan="2">7. DESCRIPTION OF EQUIPMENT

Type of equipment: Category:
Trade name:
Type No: Identification No:
Type of motor(s): Manufacturer:
Type of energy: Power/revs:
Other required technical characteristics:</td></tr>
<tr><td colspan="2">8. THE FOLLOWING DOCUMENTS BEARING THE NUMBER SHOWN IN BOX 2 ARE ANNEXED TO THIS CERTIFICATE:</td></tr>
<tr><td colspan="2">9. CERTIFICATE VALID

(Stamp)

Place

(Signature)

Date: / /</td></tr>
<tr><td></td><td></td></tr>
</table>